UniFlip Table.

The UniFlip Table is a versatile and modern solution designed to meet the demands of dynamic workspaces and meeting environments. Equipped with swivelling castors, including two lockable ones for stability, this table offers unparalleled mobility. Its standout feature is a strong flip mechanism with safety stay-upright locks, ensuring both ease of use and safety.



Features

Melamine worktop - 25mm E1 grade substrate finished in studio white or new oak with matching 2mm PVC edge

Swivelling castors (2x lockable)

Strong flip mechanism has safety stay upright locks.

One piece welded leg and foot for extra strength and longevity

Extra fast assembly time



Uni Flip Round Table





Uni Flip Table

Colour Options

Stocked Options



Arctic White | New Oak Matte | New Oak Ravine | Nordic Maple

Requested Options



Classic Natural | Sublime Teak | Natural Walnut

Frame



White | Black | Silver

Standard Foot

Ø 1200 mm	1500 x 800 mm	1800 x 750 mm
1200 x 600 mm	1600 x 600 mm	1800 x 800 mm
1200 x 750 mm	1600 x 750 mm	2100 x 900 mm
1500 x 600 mm	1600 x 800 mm	
1500 x 750 mm	1800 x 600 mm	



UniFlip Table.

Additional Frame Details

Rail Length

AU_FWFLRAIL50 - 800 mm

AU_FWFLRAIL80 - 1100 mm

AU_FWFLRAIL110 - 1400 mm

AU_FWFLRAIL140 - 1700 mm

Frames Available in

1000 - 1300 mm x 600 - 900 mm

1300 - 1600 mm x 600 - 900 mm

1600 - 1900 mm x 600 - 900 mm

1900 - 2400 mm x 600 - 900 mm

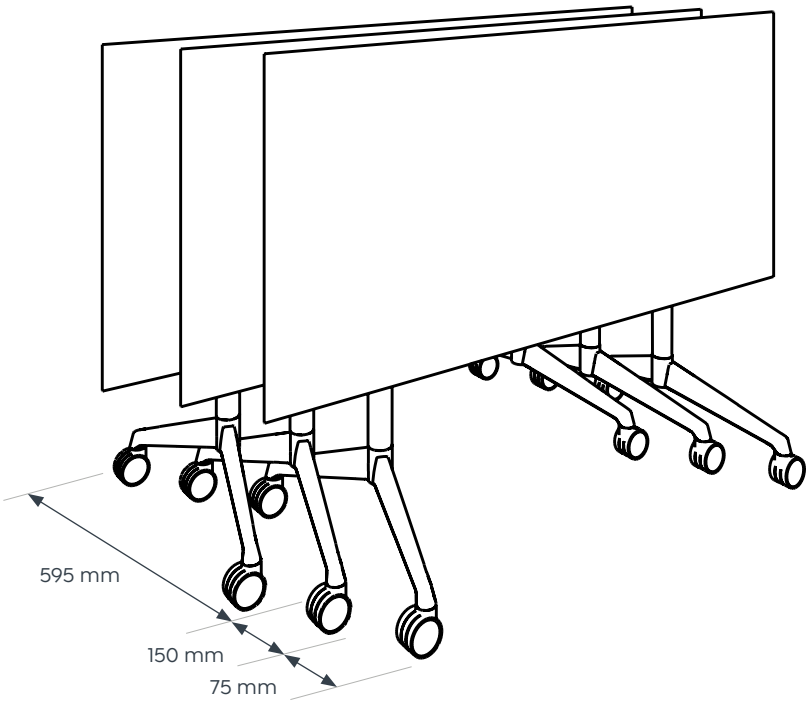

UniFlip Line Drawing (Frame Only)

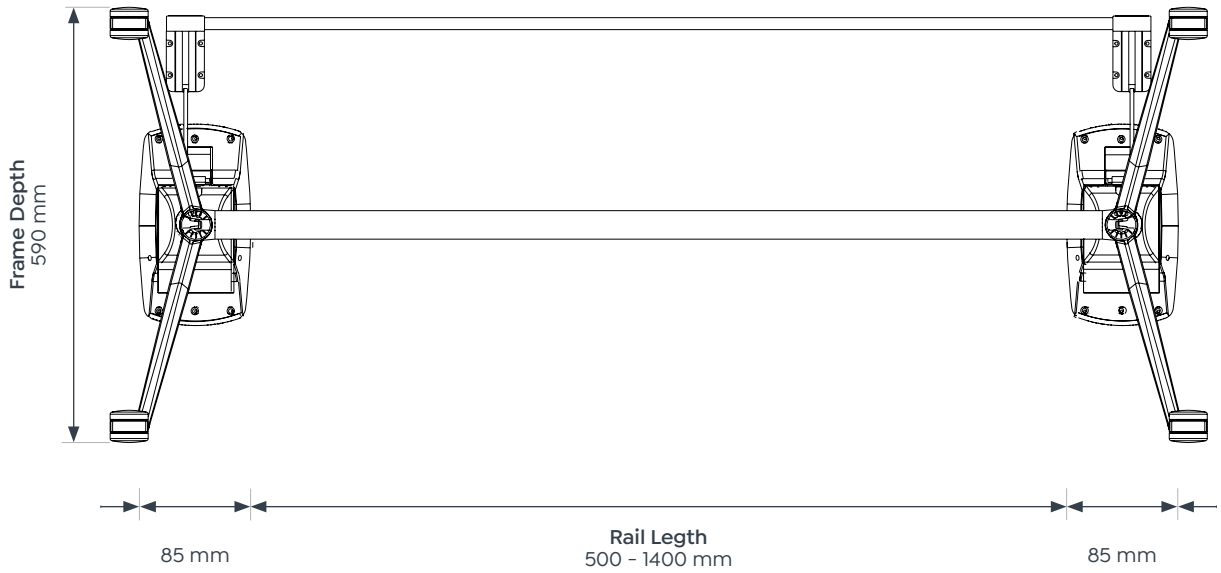

Uni Flip Table.

Dimensions

Uni Flip Standard Table

