USER MANUAL

QUIKSTAK® QS10MM

User Manual // Quikstak QS10MM
Original Instructions // English // v96.0 // August 2022

For the purposes of standards compliance and international conformity, this document uses Système International (SI) units. These may be converted to Imperial units as follows:

1 kilogram (kg) = 2.2 pounds (lb)

1 metre (m) = 1000 millimetres (mm) = 39.37 inches (in) = 3.28 feet (ft) = 1.09 yards (yd)

The following stylistic conventions are used throughout this document:

Point of interest

Safety hazard

§Internal cross-reference (hyperlink in PDF edition)

Simpro Partcode (hyperlink in PDF edition)

Errors in this document should be reported to info@simpro.world

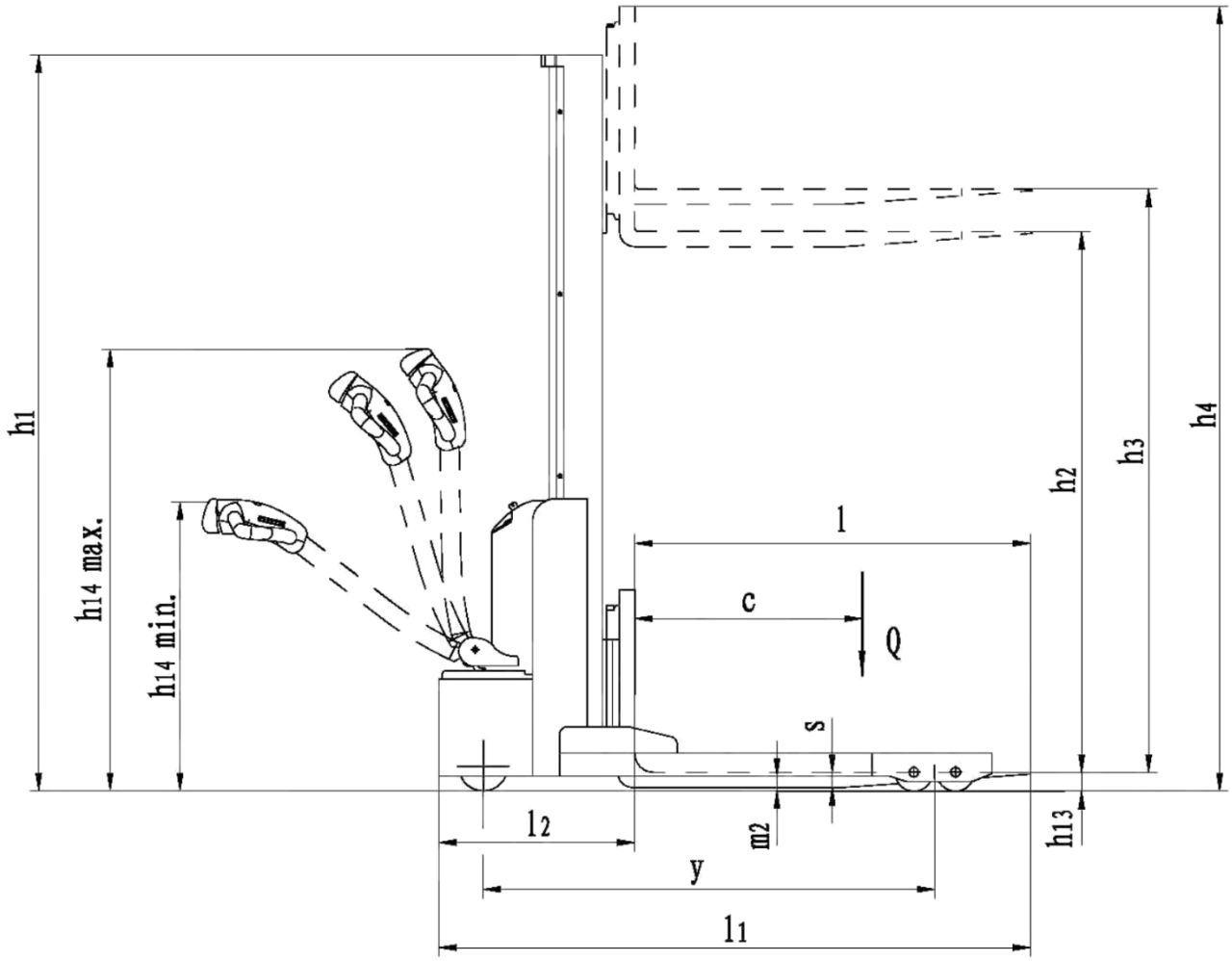
h1
h14 max.
h14 min.
l
c
Q
s
h2
h3
h4
l2
m2
y
l1
h13

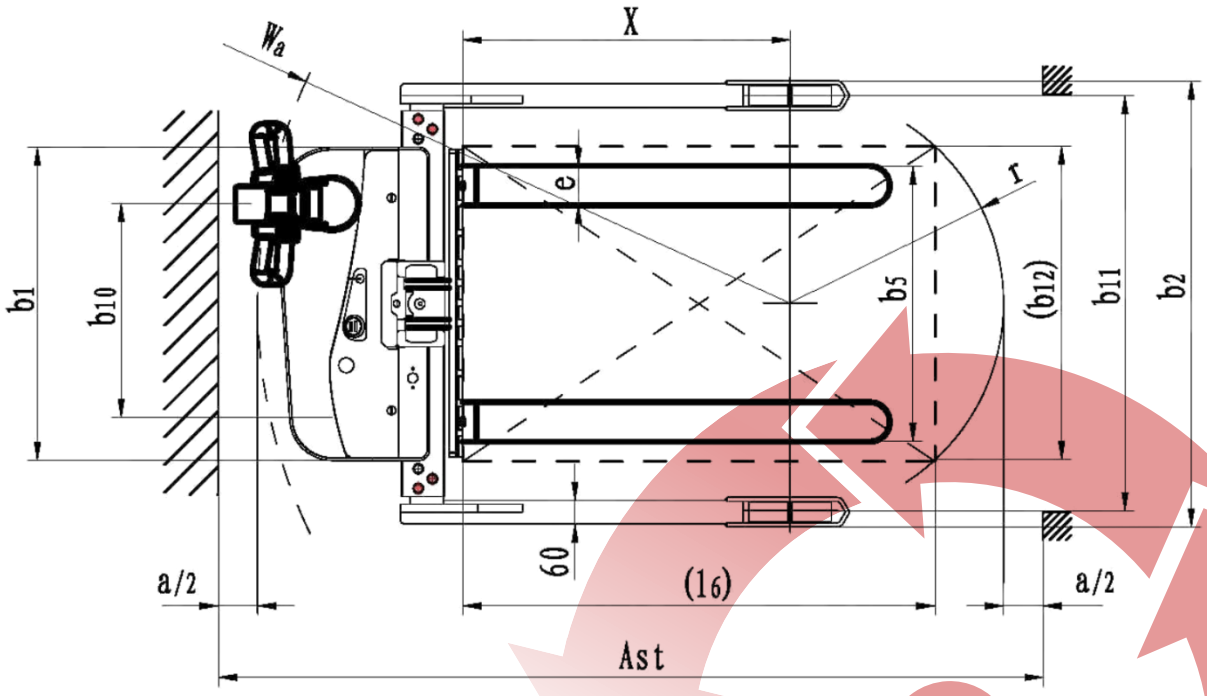
Wa
X
e
r
b1
b10
b5
(b12)
b11
b2
60
(l6)
a/2
a/2
Ast

Contents

I. Product Overview

Congratulations on your purchase of a Quikstak® QS10MM pallet stacker. Based on technology patented by Simpro in 1994, a Quikstak is much more than just another pallet stacker – it is a powerful, smart materials-handling solution.

With the QS10MM, Simpro has provided a number of improvements over the original "smart-stacker" models. Produced in partnership with EP Equipment, every QS10MM is self-propelled as standard, with a unique 'monomast' design providing an unrestricted field of view.

The QS10MM height-levelling feature is based on laser technology. When turned on, the laser sensor continuously measures the height of product stacked on the Quikstak forks. This data is passed to a PLC, which automatically raises or lowers the forks to maintain the 'stacking height' at an ergonomic level, even as product is added or removed.

With its innovative design, superb visibility, and dual-mode laser levelling, the QS10MM is the smartest Quikstak yet.

1.1 Key features

Key features of the Quikstak QS10MM include:

1. A laser height-levelling function controlled by PLC.
2. A safe lifting capacity of 1000kg.
3. A maximum lift height of 1900mm
4. An electro-hydraulic lifting mechanism.
5. Maintenance-free gel batteries with an onboard charger.
6. A self-propelled drive function with regenerative braking.
7. An industry-standard Curtis 1212 traction controller.
8. Adjustable outriggers and forks, compatible with all types of pallet.
9. A monomast design affording excellent visibility.

1.2 Construction

The Quikstak QS10MM consists of a steel frame with one vertical mast and two stabilizing outrigger legs each with two load wheels, a Class 2 fork carriage, two forks, one hydraulic ram, roller chain, guarding, control tiller with controls, one steered drive wheel and one balance castor, a drive motor and gearbox, a hydraulic powerpack, batteries, electronic control systems and a powerpack cover.

1.3 Mechanism

When the LIFT circuit is activated (either by manual control input or BY the PLC), the powerpack pumps hydraulic fluid into the lift ram, making it extend. This pulls on an arrangement of chains, causing the fork carriage to travel vertically in the mast. When the LOWER circuit is activated, a valve allows the hydraulic fluid to return to the reservoir, lowering the forks.

Electrical, hydraulic, and mechanical control systems allow the operator to lift and lower the forks in a controlled manner. An electric drive system allows the machine to be moved and steered easily, even when carrying heavy loads.

1.4 Rating plate

Item	Description
1	Manufacturer
2	Truck Type
3	Load capacity (kg)
4	Rated load centre
5	Fork width
6	Fork length
7	Fork height
8	Battery capacity
9	Service weight
10	Serial number

Figure 1

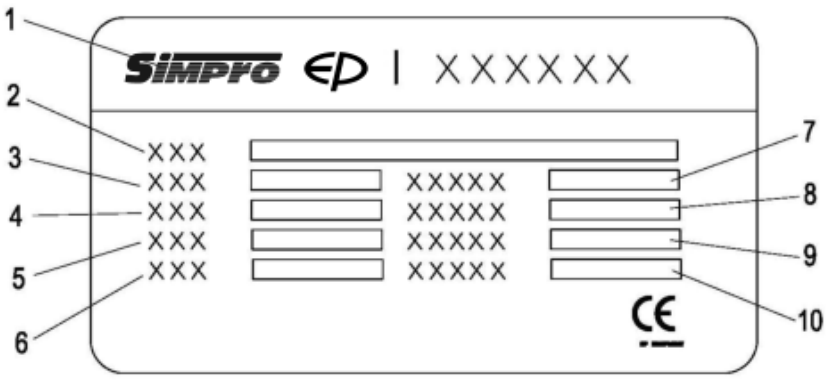

1.5 Safe Lifting Capacity

The rated Safe Lifting Capacity of the Quikstak is **1000kg at 600mm load centre**. This means that if the load centre is 600mm or less, a 1-tonne pallet can be lifted to the maximum height of 1.9 metres. If the load centre is beyond 600mm, the load capacity is progressively derated as illustrated by Figure 2.

- **Safe Lifting Capacity** refers to the weight in kilograms of the pallet, any items on the pallet, and any other objects which have been placed on the forks.
- **Load Centre** refers to the distance in millimetres from the face of the forks to the load's Centre of Gravity.

- To identify the rated Safe Lifting Capacity of a pallet stacker, refer to the rating plate in the first instance.
- Never exceed the rated Safe Lifting Capacity of a given pallet stacker.

Figure 2

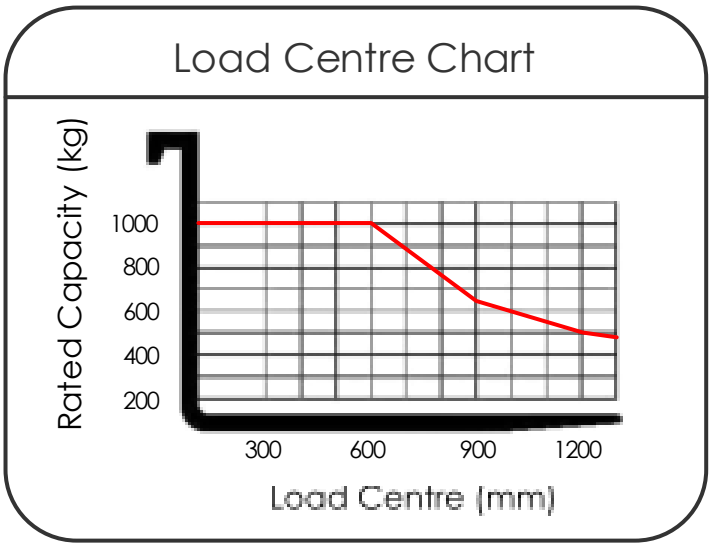

1.6 Service life

The nominal service life of the Quikstak is as follows:

Average Gross Pallet Weight	Intended operational life
< 200kg	100,000 lift/lower cycles
200kg – 800kg	75,000 lift/lower cycles
800kg – 1000kg	50,000 lift/lower cycles

1.7 Noise emissions

The noise emissions of the Quikstak do not usually exceed ~74 dB(A) at the operator's ear. Hearing protection is recommended if operating the machine for extended periods.

- ISO standards specify that machinery noise emissions be measured in A-weighted decibels, or dB(A). This is a unit of volume adjusted to reflect the sensitivity of human hearing. Measurements for a dB(A) assessment are taken at a point 1.6 metres above the ground at the operator's working position.

1.8 Environmental limitations

The Quikstak may be used indoors or outdoors. However, the following restrictions apply:

1. Minimum floor area 4 square metres, with a clear passage to exits;
2. Height above sea level not more than 1000m;

3. Ambient temperature not higher than +40℃ and not lower than -10℃;
4. At ambient temperatures above 35℃, the relative humidity should not exceed 50%; at lower temperatures, higher relative humidity is permitted;

⚠ Never operate the Quikstak in explosive, corrosive, acidic or alkaline environments.

1.9 Notes

1. This User Manual describes approved procedures for the operation, maintenance, and routine inspection of the Simpro Quikstak pallet stacker.
2. This manual is written in English, and is to be considered the 'Original Instructions' for the purposes of EU Machinery Directive 2006/42/EC.
3. Operator(s) must read and understand this manual before using the machine.
4. If the machine is to be leased, sold, or otherwise transferred, then this manual shall accompany the machine.
5. This is a generic manual. Simpro reserves the right to change the design of our products at any time. In cases where a discrepancy exists between the manual and the actual product, the manual is to be used as a reference only.
6. Contact your authorized Simpro agent if any problems or faults are encountered with the machine.
7. Errors in this manual should be reported by email to info@simpro.world.

2. Operating Instructions

Follow the instructions in this section to operate the Quikstak pallet stacker. Correctly operated, the Quikstak can bring great improvements to workplace safety and efficiency.

- The Quikstak must always be operated in strict accordance with the Safety Norms in §2.8.
- Before the Quikstak is used for the first time, a site-specific Hazard and Risk Assessment should be completed as per §6.3.
- Never attempt to operate the Quikstak if it is damaged or malfunctioning.

2.1 Identification of controls

2.1.1 Tiller controls

Figure 3

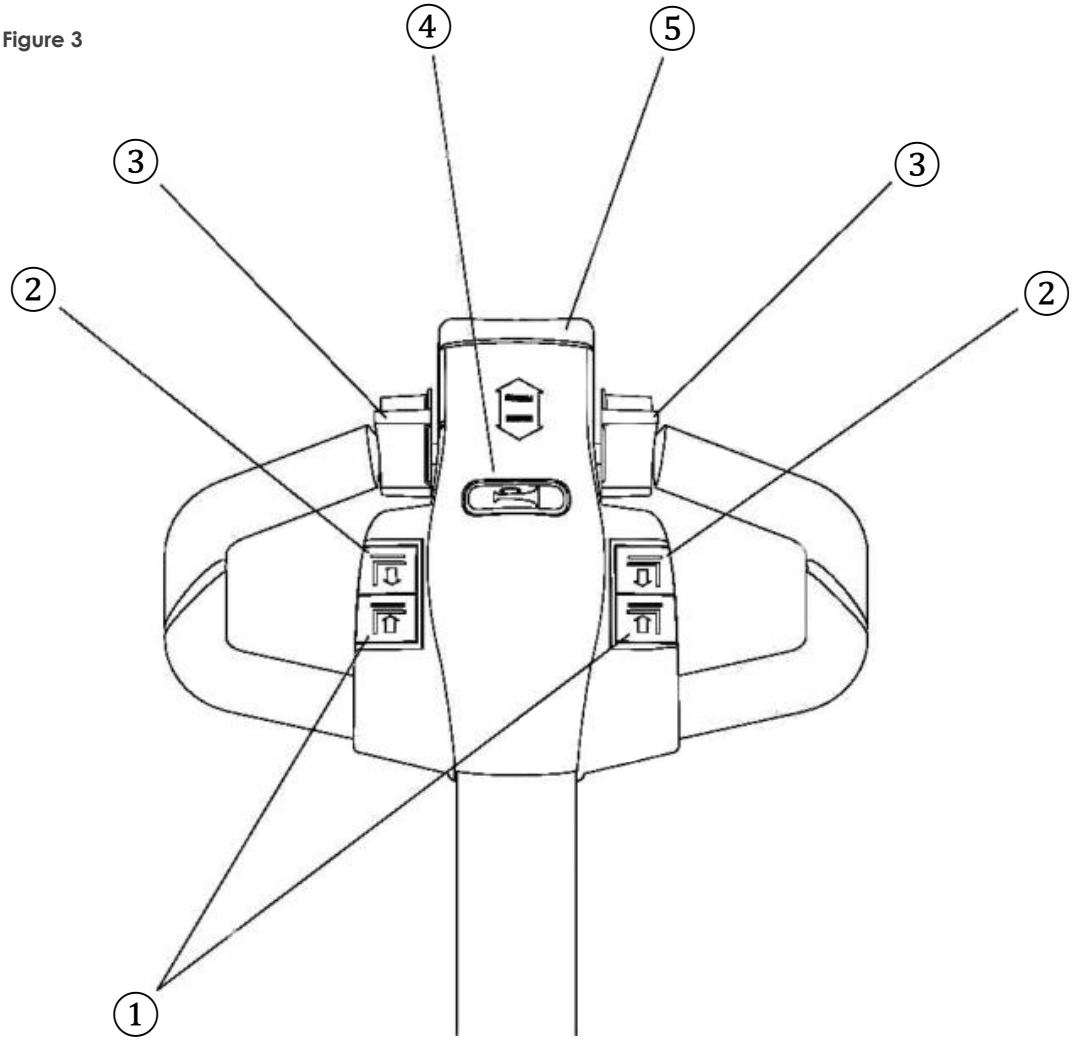

Ref	Name	Function
①	LOWER BUTTON	Lowers the forks.
②	RAISE BUTTON	Raises the forks.
③	DRIVE LEVER	Drives the stacker forwards or backwards.
④	HORN BUTTON	Sounds a load warning tone.
⑤	CRUSH SAFETY BUTTON	When reversing, stops the stacker and accelerates a short distance forward to prevent crush injuries.

2.1.2 Fascia controls

Figure 4

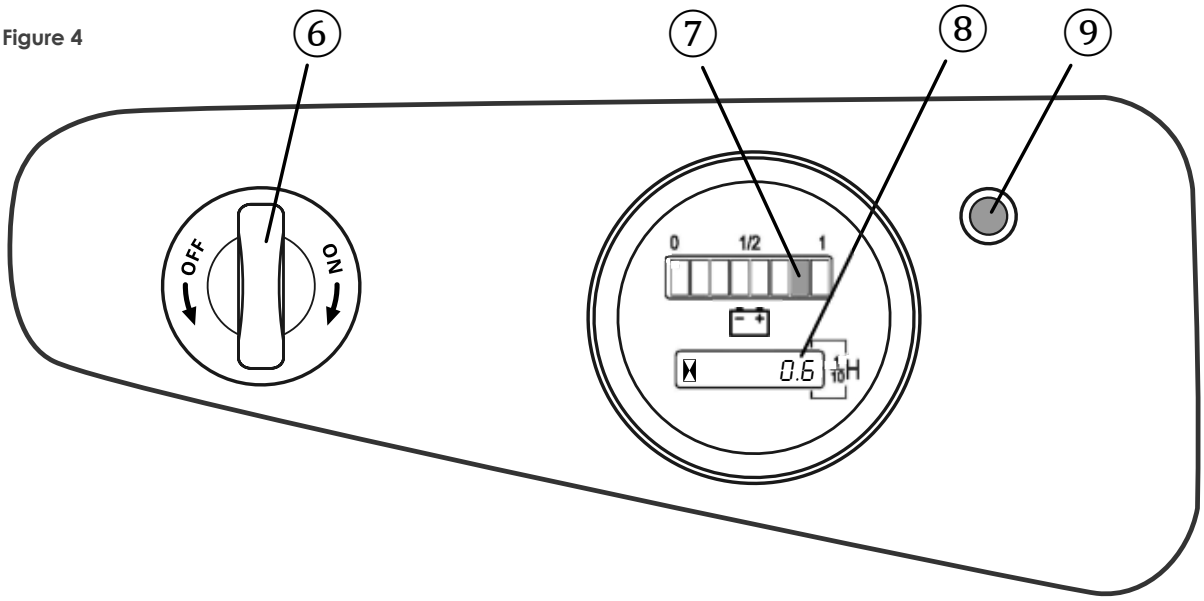

Ref	Name	Function
⑥	KEY SWITCH	Insert key and turn clockwise to power ON, or anti-clockwise to power OFF.
⑦	BATTERY INDICATOR	Indicates the level of charge remaining in the battery.
⑧	HOUR METER	Indicates how many hours of accumulated operating (driving and lifting) time the stacker has accumulated.
⑨	CHARGER STATUS LED	Indicates status of the battery charger: RED means charging, GREEN means fully charged, and YELLOW means fault.

2.1.3 Quikstak controls

Figure 5

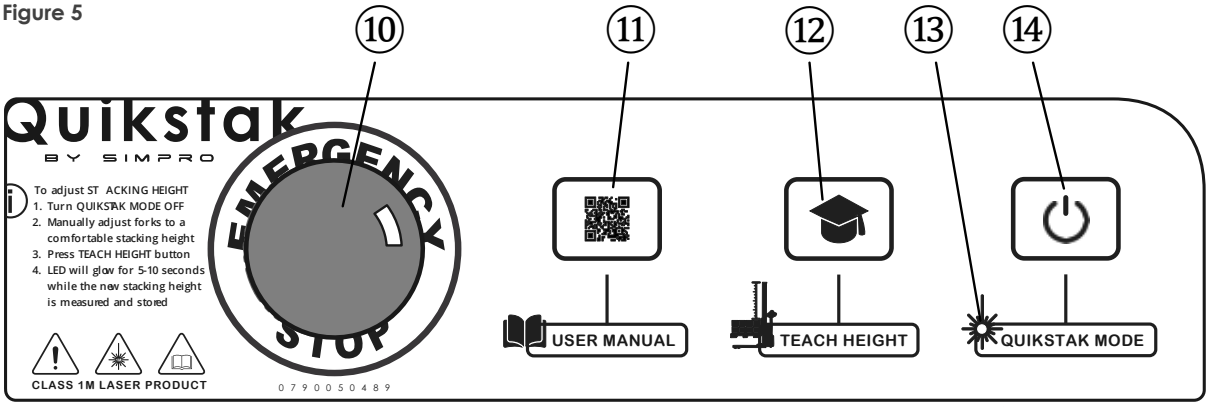

Ref	Name	Function
⑩	EMERGENCY STOP	Instantly shuts off the power and disables the stacker.
⑪	USER MANUAL QR CODE	QR code linking to an online PDF User Manual
⑫	TEACH HEIGHT BUTTON	Records a new stacking height to memory.
⑬	QUIKSTAK LED	Illuminates when QUIKSTAK MODE is turned ON, or when a new stacking height is being recorded.
⑭	QUIKSTAK MODE BUTTON	Enables and disables QUIKSTAK MODE

2.2 Before use

Before operating the Quikstak, carry out the following checks to ensure it is ready to use.

1. Check that the batteries are charged.
    a. Pull out the EMERGENCY STOP button (§2.1.3⑩).
    b. Insert the key (§2.1.2⑥) and turn clockwise to enable the power.
    c. Check the battery indicator (§2.1.2⑦) on the fascia of the stacker. If the batteries are flat (the first or second LEDs are illuminated), the Quikstak should not be used. It should be placed on charge as soon as possible, as per §2.7.
2. Check that the stacker is in good operating condition.
    a. No obvious oil leaks.
    b. No warning lights, strange sounds, or other unusual indications.

Once these checks are completed the Quikstak may be placed into operation.

2.3 Moving the Quikstak

2.3.1 Driving

The control tiller is used to control the travel direction and speed of the Quikstak. To drive the stacker, the tiller must be positioned within the zone marked **READY** in the diagram below. When the tiller is positioned in either of the zones marked **BRAKE**, the stacker cannot be driven, although the RAISE and LOWER functions are still available.

1. To drive forwards, move the tiller into the **READY** zone and rotate the **DRIVE LEVER** (§2.1.1③) in the direction marked **FWD** in Figure 6. Rotate the lever further to drive faster, and less to drive slower. Release the lever to stop the stacker by regenerative braking.
2. To drive backwards, move the tiller into the **READY** zone and rotate the **DRIVE LEVER** (§2.1.1③) in the direction marked **BWD** in Figure 6. Rotate the lever further to reverse faster, and less to reverse slower. Release the lever to stop the stacker by regenerative braking.

Figure 6

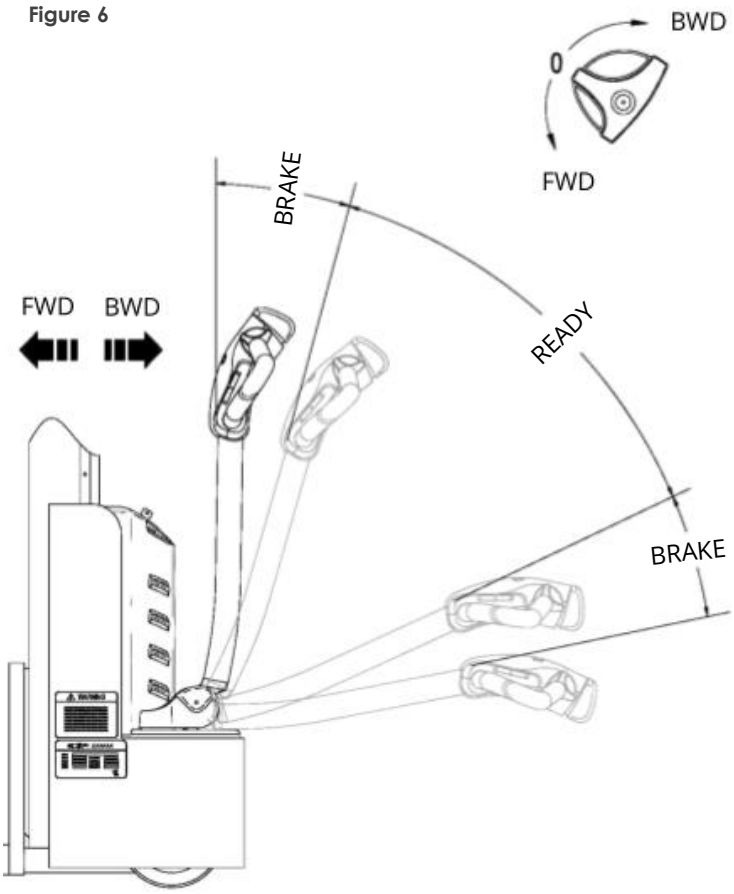

2.3.2 Steering

To steer the Quikstak, simply turn the control tiller to the left or the right as shown by Figure 7①.

Figure 7

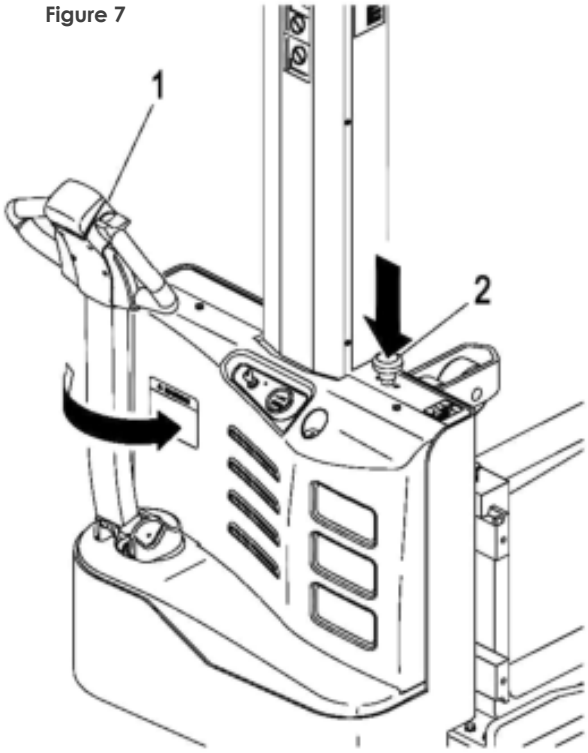

⚠ The Quikstak uses rear-wheel steering, which means the rear swings comparatively wide when turning. To minimize the risk of collisions – especially if the operator is unfamiliar with rear-wheel-steer vehicles – turns should always be conducted slowly and with care.

2.3.3 Braking

There are three braking modes available on the Quikstak. The operator may use any of these modes, depending on the situation and urgency of the braking:

2.3.3.1 Emergency braking

Depressing the EMERGENCY STOP button as shown by Figure 7② at right will immediately cut power to the stacker and engage the electromagnetic brake. Regenerative braking will not be used.

2.3.3.2 Automatic braking

Moving the tiller handle into either of the BRAKE zones (see Figure 6) will immediately engage the electromagnetic brake. Regenerative braking will not be used. If the tiller handle is released by the operator, it will pivot to the upper BRAKE zone automatically.

2.3.3.3 Regenerative braking

Moving the DRIVE LEVER to the neutral position causes the Quikstak to slow using regenerative braking (charging the battery at the same time). Regenerative braking is also used if the DRIVE LEVER is inverted relative to the current direction of travel.

2.3.4 Towing

1. If the Quikstak needs to be moved when the batteries are completely discharged, a suitable tow-rope or cable may be used, affixed to the base of the hydraulic ram.
2. Before towing, ensure the electromagnetic brake is disengaged.
3. When the stacker is placed in storage, the electromagnetic brake must be re-engaged to ensure the stacker is braked.

⚠ Do not attempt to tow the Quikstak while carrying a load on the forks. Any load should be removed before towing commences.

⚠ Do not attempt to tow the Quikstak on ramps or heavily sloping ground.

2.4 Handling pallets

Once the pre-operation checks set out in §2.2 are complete, the Quikstak may be used to collect, lift, lower, stack and transport pallets in accordance with the procedures below.

1. Drive the Quikstak to the pallet which is to be collected. Approach the pallet from a 90-degree angle, with the forks and outriggers aligned so as to avoid striking obstacles or internal cross-members.
2. When close to the pallet, use the RAISE and LOWER buttons to adjust the forks the correct height.
3. Slowly drive the Quikstak directly forward so that the forks traverse inside the pallet. Take care that the outriggers do not strike obstacles at ground level.
4. Press the RAISE button to lift the pallet a short distance.
5. Reverse the Quikstak with the pallet, again taking care to avoid obstacles. The pallet can now be transported to the desired destination.

⚠ Only transport pallets that are balanced and centrally positioned on the forks. Do not allow other persons to approach within 2 metres of the stacker while carrying a load.

⚠ A CRUSH SAFETY button is fitted to end of the control tiller as per 2.1.1⑤. If this button is pressed against the operator's body while reversing, the Quikstak will immediately stop and drive a short distance forward to prevent injury.

6. At the destination, manoeuvre the Quikstak so that the pallet is located above the point where it is to be deposited.
7. Press the LOWER button to deposit the pallet into place.
8. Once the pallet is deposited, briefly press the RAISE button to lift the forks ~10mm.
9. Slowly reverse the Quikstak in a straight line until he forks are completely disengaged from the pallet. The Quikstak may now be driven and used elsewhere.

⚠ If the Quikstak stops working or behaves abnormally, it should be slowly driven or towed to a safe location and parked. It should not be used again until the fault has been diagnosed and repaired by an authorized service technician.

2.5 Using the Quikstak height-levelling system

The Quikstak is fitted with an automatic height-levelling system, which automatically adjusts the height of the forks while stacking goods, to maintain an ergonomic working height.

2.5.1 Stacking goods

1. Collect a pallet on the forks as per §2.4, then drive the Quikstak to the stacking location (for instance, end of a production line or beside a conveyor belt).
2. Manually adjust the forks to an ergonomic height for stacking goods onto the pallet.
    a. The most ergonomic stacking height is around the same level as the operator's waist, typically between 1m and 1.2m high.
    b. Ideally the pallet should be positioned slightly lower than the surface from which the goods are being taken.
    c. The Quikstak should be positioned so that goods can be stacked with a minimum of lifting, bending, stretching, or reaching.
3. Press the TEACH HEIGHT button (§2.1.3⑫) and wait for 5-10 seconds while the working height is measured and stored to memory.

The QUIKSTAK LED (§2.1.3⑬) will glow while the stacking height is measured. The forks may move up and down a short distance to assist with calibration.

4. Press the QUIKSTAK MODE button (§2.1.3⑭) to activate the height-levelling system. The laser sensor will now monitor the height of the goods stacked on the pallet, and automatically raise or lower the forks to maintain the 'stacking height'.

Before turning QUIKSTAK MODE on, check that the area below and above the forks is clear of obstacles. Never place feet or any other object beneath the forks.

5. Start stacking goods onto the pallet. As the stack becomes higher, the forks will move lower to maintain the stacking surface at an ergonomic height. This eliminates the need for hazardous manual lifting and lowering.
    a. When stacking a layer of goods such as boxes, place the first item directly beneath the laser sensor (marked by a red pointer) so the forks will be lowered to the correct height for stacking the rest of the layer.
    b. If the stacking height is not exactly right, turn QUIKSTAK MODE off, manually adjust the forks and press TEACH HEIGHT again, all as per step (2). The stacking height will be updated in memory.
6. Once the pallet is complete, press the QUIKSTAK MODE button (§2.1.3⑭) again to deactivate the height-levelling system. The full pallet can now be transported and stored, and another empty pallet collected as per Step (1).

2.5.2 *De-stacking goods*

1. Collect a pallet of goods as per §2.4, then drive the Quikstak to the de-stacking location (typically adjacent to a conveyor belt, CNC machine or processing plant).
2. Manually adjust the forks to an ergonomic height for de-stacking the goods.
    a. The most ergonomic de-stacking height is around the same level as the operator's waist, typically between 1m and 1.2m.
    b. Ideally the base of the highest 'layer' of goods should be slightly above the surface onto which the goods are being placed.
    c. The Quikstak should be positioned so that goods can be de-stacked with a minimum of lifting, bending, stretching, or reaching.
3. Press the TEACH HEIGHT button (§2.1.3⑫) and wait for 5-10 seconds while the working height is measured and stored to memory.

The QUIKSTAK LED (§2.1.3⑬) will glow while the stacking height is measured. The forks may move up and down a short distance to assist with calibration.

4. Press the QUIKSTAK MODE button (§2.1.3⑭) to activate the height-levelling system. The laser sensor will now monitor the height of the goods stacked on the pallet, and automatically raise or lower the forks to maintain the 'stacking height'.

Before activating the Quikstak system, check that the area below and above the forks is clear of obstacles. Never place feet or any other object beneath the forks.

5. Start removing goods from the pallet. As the stack becomes lower, the forks will move higher to maintain the de-stacking surface at an ergonomic height. This eliminates the need for hazardous manual lifting and lowering.
    a. When de-stacking a layer of goods such as boxes, leave the item directly beneath the laser sensor (marked by a red pointer) until last, so the forks will remain at the correct height until the layer is completely removed.
    b. If the de-stacking height is not exactly right, turn QUIKSTAK MODE off, manually adjust the forks and press TEACH HEIGHT again, all as per step (2). The stacking height will be updated in memory.
6. Once the pallet is empty, press the QUIKSTAK MODE button (§2.1.3⑭) again to deactivate the height-levelling system. The empty pallet can now be transported and stored, and another full pallet collected as per Step (1).

2.6 Parking the stacker

After operation, park the Quikstak by carrying out the following procedures:

1. Drive the Quikstak to the designated parking location.
2. Lower the forks to the ground.
3. Turn off the key-switch. The key may be removed for safekeeping if necessary.
4. Depress the EMERGENCY STOP button.
5. If necessary, place the stacker on charge as per §2.7.

⚠ These procedures should be carried out even if the Quikstak is only unused for a short period of time.
⚠ Never park the Quikstak on sloping ground, or with the forks raised.

2.7 Charging the batteries

When the battery indicator (§2.1.2⑦) shows less than 20% charge as illustrated by Figure 8, the Quikstak should not be used, and should be placed on charge as soon as possible.

Figure 8

When the first or second LED is flashing the batteries must be promptly recharged

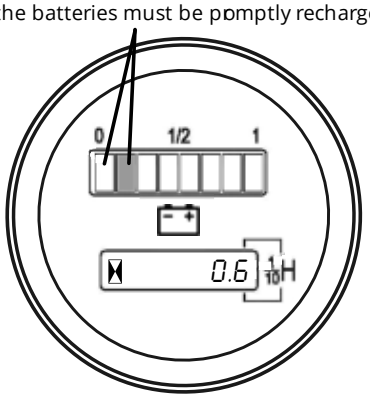

1. Drive the Quikstak to the designated charging location and park it as per §2.6.
2. Withdraw the charging lead from the fascia and plug it into a regular 1-phase power outlet. The charger status LED (§2.1.2⑨) will glow RED to indicate that charging is underway. A full charge may take up to 6 hours. The Quikstak cannot be operated while on charge.
3. When the batteries are fully charged, the charger status LED will start to glow GREEN. The charging lead should be disconnected from the wall socket and re-stowed into the facia before the Quikstak is operated.

⚠ Continuing to operate the stacker on less than 20% charge may damage the batteries.
⚠ It is recommended to recharge the batteries only when there is less than 50% charge remaining. Over-frequent or incomplete charging may reduce battery life.

2.8 Safety Norms

The following operating norms must be observed for the safe use of the Quikstak.

Standard Operating Procedure

- Before the stacker is deployed, a Standard Operating Procedure must be formulated, taking consideration of the actual conditions of use.
- The Standard Operating Procedure must be fully understood by all staff using the Quikstak or working in proximity to it.

Operators

- Only operators who have received formal training and may be authorized to operate the stacker.
- All operators must read and understand this manual before using the stacker.
- Never operate the stacker while tired, lacking in concentration or while under the influence of drugs, alcohol or other performance impariring substances.
- Operators must always wear safety shoes and suitable protective clothing. Do not wear loose clothing, as it may be caught, resulting in dangerous entrapment.
- Long hair should be tied back.
- Operator should carefully familiarise themselves with the stacker and its operational characteristics before use.

Operating Environment

- The stacker may only be used indoors on hard flat surfaces.
- The stacker must not be used to lift loads on ramps or sloping ground.
- The operating surface should be in good condition, with a minimum of traffic and marked zones for pedestrians.
- The operating area should be lit to a minimum of 200 lux.
- Operation in flammable, explosive, or corrosive (acidic or alkaline) environments is forbidden.
- Never allow open flame, smoking or other ignition hazards in proximity to the stacker and charger.
- Fire extinguishing appliances shall be available in the places where stacker use and charging is carried out. The extinguishing appliances shall comply with the requirements of extinguishing fire of solid combustible matter and electric apparatus.

Basic Operation

- Before use, ensure there are no persons (other than the operator) on or near the stacker.
  - Never allow persons to ride or travel on the stacker, other than in an authorised, properly-designed man-cage.
- Never place any part of the body underneath the forks or load.
- Operating this stacker requires the operator's complete attention, as well as unimpeded vision and hearing.
  - Focus on the task at hand
  - Do not wear dark sunglasses
  - Do not wear earplugs or headphones
- This stacker has rear wheel drive and rear wheel steer. Due to this difference from common vehicles, the rear of the stacker swings comparatively quickly when turning. Drive slowly when turning to prevent collision with other objects.
- Avoid making sharp turns in narrow aisles or tight spaces.
- When turning, reduce speed to minimise the risk destabilising the load or causing a collision.
- Avoid abrupt manouvres when carrying goods. Sharp turns or changes in speed may destabilise the load or the stacker itself.
- Never drive the stacker at speed with the forks above 500mm. Keep the forks as low as possible when transporting goods.
- Lower the forks to the ground when the stacker is not in use.
- The operator must always have a view of the direction of travel. If the view forward is obstructed by the load, drive the stacker backwards, or request the guidance of another trained operator.
- Request the guidance of another trained operator when manouvering through narrow access routes or aisles.
- Sound the horn, slow down and drive with caution at crossroads or other situations where the operator's view is limited, or where unexpected traffic may appear.
- Take care when operating in high winds as this can cause unexpected instability.
- When traversing slopes and ramps, drive below 4km/h and be prepared to brake at any time.
  - Moving up slopes, the stacker should be driven fowards, with the forks in front.
  - Moving down slopes, the stacker should be driven backwards, with the forks behind.
  - Do not attempt to turn or park the stacker on sloping ground.
- Before operating the stacker on an elevated platform, structure or deck, ensure it has sufficient load-bearing capacity.
  - Always maintain a safe distance from the edge of the platform.
- Before loading the stacker into a lift or elevator, ensure it has sufficient rated lifting capacity.
  - The stacker should be driven into the elevator first, followed by the operator. At the terminus, the operator should leave first.

Load safety

- This stacker is rated to lift 1000kg (1 tonne; 2200 lb).
- Never overload the stacker. Overloading may cause the drive wheels to leave the ground, damaging the motor and rendering the stacker difficult to control, as well as causing unneccesary danger to personnel.
- Always use pallets of a suitable size, which fit cleanly onto the forks, without excessive overhangs to the front or sides.
- Travel at less than 2km/h when inserting or removing forks from a pallet or placing a pallet onto racking.
- The stacker is electronically limited to 3km/h when the forks are raised above approximately 500mm.
- When lifting a load, the center of gravity should be positioned centrally between the forks.
- Never attempt to transport loose or unstable loads.
- Do not leave the forks in a raised position carrying heavy loads for prolonged periods of time.

After operation

- Park the stacker in a designated, marked parking space. Never park on sloping ground or in a position where it will obstruct other traffic
- Lower the forks to the ground.
- Turn the tiller to the central position.
- Turn off the key switch
- Place the stacker on charge.

Charging and electrical safety

- Ensure the charging area is clean, dry, well ventilated and at least 2 metres away from potential ignition sources.
- When there is less than 20% charge remaining, immediately stop using the stacker and recharge the batteries. Continuing to operate the stacker on less than 20% charge may damage the batteries or blow a fuse.
- It is recommended to recharge the batteries only when there is less than 50% charge remaining. Over-frequent or incomplete charging may reduce battery life.
- Do not allow the batteries to remain discharged for extended periods (more than 24 hours), as this may reduce battery life.
- Never modify or replace the charging lead without consultation with the manufacturer or an authorised representative.

3. Handling, Transport & Storage

3.1 Assembly

The Quikstak is usually delivered fully assembled, but in some cases the forks and/or straddle legs may be removed to reduce volume for shipping. These parts may be refitted using the procedures described in §4.5.7.1 (forks) and §4.6.5.1 (straddle legs).

3.2 Jacking up

Observe the following procedure when jacking up the Quikstak:

1. Lower the forks, turn the Quikstak off and depress the EMERGENCY STOP. Check that the jack is in good condition and rated to least 1000kg.
2. Position the jack beneath the very centre of the Quikstak frame, taking care that it will not slip or topple.
3. Extend the jack just far enough to lift the outrigger wheels slightly off the ground.
4. Once the jack is extended, place wooden blocks beneath the frame on either side as an additional safeguard while work is carried out.

⚠ Never place hands or feet beneath the Quikstak while it is jacked up.

3.3 Lifting

Observe the following procedure when lifting the Quikstak:

1. Lower the forks, turn the Quikstak off and depress the EMERGENCY STOP.
2. Check that the lifting equipment is in good condition and rated to least 1000kg.
3. Attach a sling or chain to the lifting equipment, and fasten it to the cross-member at the top of the mast. A slot is provided in the perspex guarding to facilitate this.
4. Lift, transport and lower the Quikstak into the desired position, ensuring it remains upright at all times. It is recommended to have at least one other person present to watch for obstructions and steady the Quikstak if needed.

⚠ Never stand or reach underneath the Quikstak while it is being lifted.
⚠ The standard Quikstak weighs around 575kg. Always verify the weight of the machine on the rating plate, and confirm that the lifting equipment has sufficient capacity.

3.4 Transportation

Observe the following procedures when transporting the Quikstak.

1. If possible, palletise the Quikstak to reduce the risk of handling damage:
    a. Lower the forks, turn the Quikstak off and depress the EMERGENCY STOP.
    b. Observing the procedures in §3.3, use lifting equipment to place the Quikstak onto a heavy-duty wooden pallet.
    c. Tie the Quikstak firmly onto the pallet with plastic or metal strapping.

   d. Load the pallet onto the transport vehicle using a one-tonne or larger forklift.
2. If the Quikstak cannot be palletised, it may be loaded directly onto the transport vehicle with the aid of lifting equipment, a tail-lift device, or a loading dock:

> ⚠ Before loading an unpalletized Quikstak, check that the deck of the transport vehicle is capable of bearing the loads. The standard Quikstak weighs around ~575kg, with up to 260kg on the drive wheel, generating point loads up to ~1250kPa (180psi).

   a. If using lifting equipment, observe the procedures in §3.3 to load the Quikstak onto the transport vehicle.
   b. If using a tail-lift device, ensure it has sufficient capacity, and exercise caution when driving the Quikstak onto and off the lift platform.
   c. Once the Quikstak is aboard the transport vehicle, carefully drive it to the desired position, exercising particular caution when close to edges.
   d. Lower the forks, turn the Quikstak off and depress the EMERGENCY STOP.
3. Tie the pallet and/or Quikstak into position, using strops rated to at least 1000kg and marked tie-down points. Ensure it is secured against lateral forces from any direction.

> ⚠ If the transport vehicle is uncovered, it is recommended to transport the Quikstak only in fine weather, and to remove the key for safekeeping.

3.5 Storage

If the Quikstak is not to be used for a period of two months or more, it should be stored in a clean, dry place with good ventilation, at temperatures not below 0℃. Before placing the machine into storage, carry out the following procedures:

1. Lower the forks, turn the Quikstak off and depress the EMERGENCY STOP button.
2. Charge the batteries fully as per §2.7.
3. Clean the stacker thoroughly as per §4.2.
4. Check the level of hydraulic fluid, and top-up if necessary as per §4.5.1.1.
5. Disconnect and clean the batteries, and grease the terminals.
6. Spray exposed electrical contacts with contact oil.
7. Spray exposed and/or unpainted metal parts with silicone lubricant to protect against corrosion.
8. Remove the key from the key-switch for safekeeping.

> ⚠ If the Quikstak is in long-term storage, the batteries must be given a top-up charge every three months to counteract the effects of self-discharge. Failure to do so will cause the batteries to run flat and eventually be destroyed by sulfation.

4. Care and Maintenance

The Quikstak is designed to give many years of service with minimal maintenance. In the event a fault or malfunction does occur, refer to the Quick Troubleshooting Guide in §4.1 before contacting your agent for support.

- Contact your agent in the first instance if repair or service work is required.
- All repair and service work must be carried out by a qualified, authorised technician.
- Replacement parts must be supplied by Simpro or an authorized Simpro agent, and must be of the same design and specification as the original parts.
- A detailed Service Manual giving specific testing and repair instructions is available on request from Simpro.

4.1 Quick Troubleshooting Guide

Refer to the Quick Troubleshooting Guide below before contacting your agent for support.

Problem	Possible Causes	Remedy	See also
Stacker does not turn on	Key switch in OFF position	Insert key and turn clockwise to turn the stacker on	§2.1.2⑥ Key-switch 1030381514
	EMERGENCY STOP button depressed	Pull the EMERGENCY STOP outwards to enable the power	§2.1.3⑩ E-Stop 1030381516
	Flat batteries	Check battery indicator and recharge batteries if necessary	§2.1.2⑦ Indicator 1030381528
	Faulty/blown fuse	Check fuses	§4.4.7 Motor fuse 1030381544 Controller fuse 1030381545
	Stacker is in CHARGE mode	Disconnect the charging lead	Charger 1030381519 Charging lead 1030381534
Stacker turns on, but forks do not lift	Hydraulic fluid level too low	Check the level of hydraulic fluid and top-up if necessary	§4.5.1.1
	Stacker is overloaded	Remove excess material from the pallet	§1.5

4.2 Cleaning

Before cleaning the Quikstak, park it in a safe location as per §2.6.

The Quikstak should be cleaned with a microfiber cloth and a non-flammable cleaning solution. The exterior of the Quikstak may be cleaned with a low-pressure water jet, but it should not be directed directly onto the controls or around the edges of the outer cover.

- Do not clean the Quikstak with a waterblaster or high-pressure water jet.
- If using flammable cleaning agents, ensure there are no ignition sources within 4 metres.

4.3 Removing the outer cover

The powerpack, batteries and electronic systems of the Quikstak are protected by a plastic outer cover[1030381548]. This cover can be removed to permit service and maintenance work by carrying out the procedures below.

Figure 9

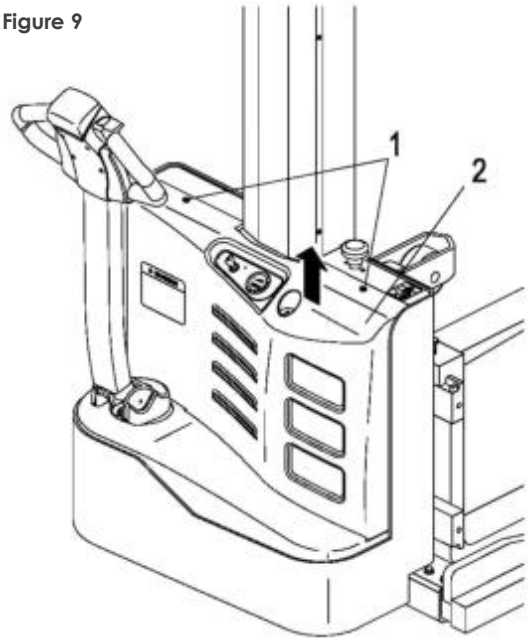

1. Park the Quikstak as per §2.6 in a safe location away from pedestrian and vehicular traffic, and at least 4 metres from potential ignition sources.
2. Turn the Quikstak off, remove the key, and depress the Emergency Stop.
3. Using a 5mm hex key (Allen key), remove the two screws securing the outer cover as per Figure 9①. Place the screws aside for safekeeping.
4. Remove the outer cover by lifting it upwards, as per Figure 9②. Place the cover aside.
5. When maintenance work is complete, replace the outer cover by reversing this procedure.

- The outer cover should only be removed by authorised, qualified service personnel.
- Do not remove the outer cover while the Quikstak is powered on.
- Do not remove the outer cover in the presence of potential ignition sources.

4.4 Electrical System

The Quikstak is fitted with an onboard charger and two 12V/85Ah AGM deep-cycle batteries, connected in series to provide 24VDC to the control circuits and motors. A Curtis 1212 traction controller operates a 24VDC drive motor and electromagnetic brake, providing regenerative braking to extend battery life.

A second DC motor operates the hydraulic pump. This motor only runs when the RAISE circuit is active; the forks are lowered by gravity alone.

4.4.1 International conformance

The Quikstak is fitted with a digital smart charger which accepts 1-phase 100-240VAC 50/60Hz mains power, with a maximum current draw of 3 Amps. This means the stacker can be charged using 1-phase mains power in almost any country around the world.

4.4.2 Batteries[1030440012]

The Quikstak is fitted with two 12V/85Ah AGM deep-cycle batteries, connected in series to provide 24VDC (nominal) to the control circuits and motors. The battery cases are 256mm long x 165mm wide x 210mm high.

The batteries are sealed and maintenance-free, with a nominal lifespan of up to five years. However, battery life is dependent on several factors, including the number of charge cycles, the average discharge depth, and environmental conditions.

- When charging the batteries ensure there are no sources of ignition within 4 metres.
- Do not use a dry microfiber cloth or other static generator to clean the batteries.
- Do not place metallic objects onto or near the batteries.

4.4.2.1 *Maximising battery life*

Observing the following rules can help to maximize the life of the batteries:

- Check the charge level of the batteries at the end of the working day; if it is between 20% and 50% the batteries should be charged overnight.
- Avoid partially recharging the batteries.
- Do not allow the batteries to remain discharged for more than 24 hours.
- Do not operate the Quikstak when the batteries have less than 20% charge.
- Ensure the terminals are kept dry and clean, with a light coating of dielectric grease.

- The batteries are supplied with a 12-month manufacturer's warranty, separate from the warranty on the rest of the machine.

4.4.2.2 *Battery disposal*

Batteries must be disposed of in strict accordance with all applicable environmental protection laws and regulations. The batteries contain an acidic gel which is poisonous and corrosive. When handling batteries which are damaged or leaking, appropriate Personal Protective Equipment must be worn.

- If battery acid comes into contact with the skin or eyes, the affected area should be immediately rinsed with fresh water for ten minutes, and medical assistance requested.

4.4.3 *Battery indicator* 1030381528

The Quikstak fascia is fitted with a battery indicator (§2.1.2⑦), which has a strip of LED lamps to indicate the level of charge. When the third LED or higher is illuminated, the batteries have more than 30% charge; the Quikstak may be operated normally.

When the first or second LEDs are flashing, the batteries have less than 20% charge. The Quikstak should not be used, and should be promptly placed on charge per §2.7.

Figure 10

When the first or second LED is flashing the batteries must be promptly recharged

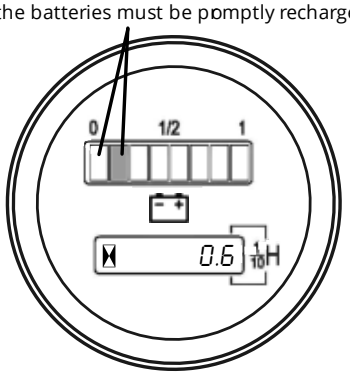

- The Quikstak has a low-voltage protection mode, which limits the maximum travel speed when the batteries have less than 20% charge.
- Operating the Quikstak with less than 20% charge may reduce the life of the batteries.

4.4.4 *Battery charger* 1030381519

The Quikstak is fitted with a digital smart charger with nominal output of 24V/10A and a maximum power of 240 Watts. The charger accepts 1-phase mains input at 100-240VAC 50/60Hz, with a maximum current draw of 4 Amps.

- The battery charger automatically adapts to different input currents, manages the charging cycle to maximise battery life, and prevents overcharging.

The battery charger is in an enclosed plastic case and is protected against short-circuit, current overload, over-voltage, and over-temperature conditions.

The batteries may vent flammable hydrogen gas while charging.

4.4.4.1 *Charger status LED*

The Quikstak is fitted with a charger status LED on the fascia (§2.1.2⑨), which glows to provide information about the current state of charger, as below.

Charger Status LED	Charger Status	Description
Solid Red	Charging	Battery is currently charging
Solid Green	Fully Charged	Battery is fully charged
Solid Yellow	Battery Failure	Battery voltage is abnormal (less than 13V or more than 32.5V)
Flashing Yellow	Charger Failure	Charger output current or voltage is excessive, or the charger is overheating
Flashing Red	Null Output	The battery is disconnected, or a failure has occurred in the charger output circuit
No Light	Null Input	The charger input is disconnected, or a failure has occurred in the charger input circuit

4.4.5 *Charging lead* 1030381534

The Quikstak is fitted with an extendable 2-metre charging lead, which is stowed in the fascia as per Figure 11①. By default, this lead has an IEC Type-I plug, suitable for use in Australia and New Zealand. Other types of plugs can be fitted if required.

Figure 11

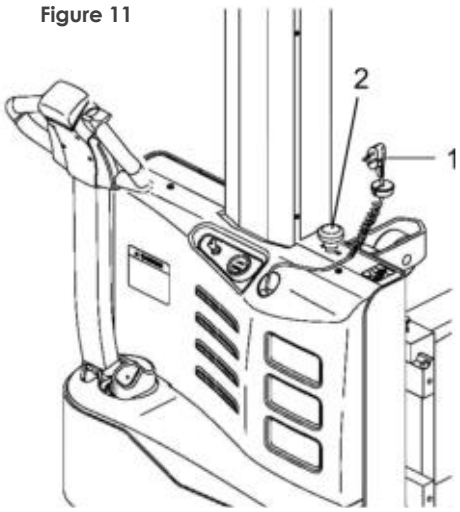

4.4.6 *Emergency Stop* 1030381516

The Quikstak is fitted with an EMERGENCY STOP button on the Quikstak control panel, as per Figure 11②. This button disables the stacker and isolates the batteries. It should be depressed whenever the machine is parked, cleaned, serviced, or placed in storage.

4.4.7 *Fuses*

The Quikstak has two master fuses to protect components from high current draw. If a fuse is blown, it must be replaced by a fuse with identical specifications.

4.4.7.1 *Motor fuse* 1030381544

The motor fuse has a rating of 150A and protects both the drive and lift motors from high current draw. Its location is shown by Figure 12①.

Because electric motors draw more current as the voltage decreases, operating the machine with a flat battery may blow the motor fuse.

4.4.7.2 *Controller fuse* 1030381545

The controller fuse has a rating of 10A and protects the traction controller from excessive current draw. Its location is shown by figure 12②.

Figure 12

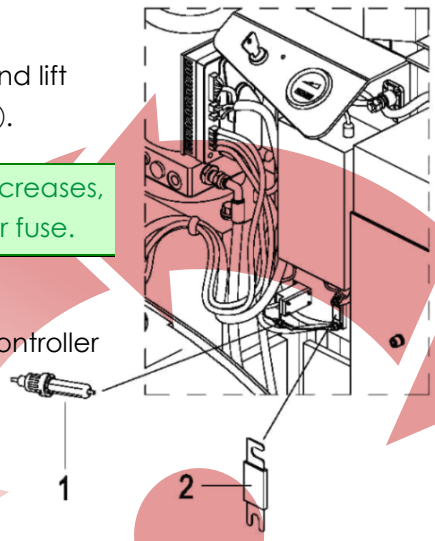

4.4.8 Traction controller 1030381529

The Quikstak is fitted with a Curtis 1212 traction controller, which manages the DC drive motor, electromagnetic brake, and regenerative braking. It outputs up to 90 Amps at 24VDC, for a maximum power of 2160 Watts. It has a red status LED as shown by Figure 13.

4.4.8.1 Controller diagnostics

Controller faults can be diagnosed using a Curtis handheld programmer 1030381509, or by reading the flash pattern of the status LED in reference to the table below.

If the controller status is nominal (no faults), the LED glows steadily. If a fault is detected, it flashes continuously with the fault code until it is rectified.

Each fault code is comprised of two digits, encoded as a series of rapid flashes separated by a one-second pause. The number of flashes before and after the pause correspond to the two digits of the fault code.

After the fault code is transmitted the status LED turns off for three seconds and then repeats it, as shown by Figure 13.

Figure 13

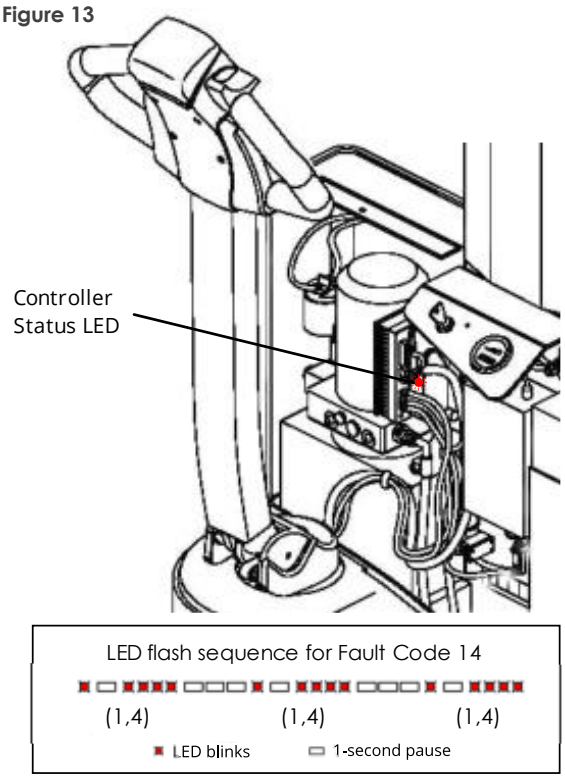

Fault Code	Fault Name	Fault Detail	Potential Cause
11	THERMAL FAULT	Controller temp above 80°C or below -10°C	- Drive motor overloaded from travelling up ramps or towing - Electromagnetic brake jammed on - High-temperature operating environment
12	THROTTLE FAULT	Throttle Pot Wiper out of range	- Throttle Pot wiring broken or shorted - Throttle Pot broken or defective - Wrong throttle type selected
13	SPEED POT FAULT	Speed Limiter Pot Wiper out of range	- Speed Limiter Pot wiring broken or shorted - Speed Limiter Pot broken or defective
14	UNDERVOLTAGE FAULT	Input voltage below 17V	- Battery is completely flat - Battery has failed - Connection to battery is poor
15	OVERVOLTAGE FAULT	Input voltage above 31V	- Stacker operated with charger still connected - Intermittent connection to battery
21	MAIN OFF FAULT	Main Contactor Driver OFF fault	- Main Contactor Driver failed in OFF (open) position
22	NULL	-	-
23	MAIN FAULT	Main Contactor fault	- Main Contactor welded or jammed in the OFF (open) position - Main Contactor Driver failure
24	MAIN ON FAULT	Main Contactor Driver ON fault	- Main Contactor Driver failed in ON (closed) position
25	NULL	-	-
31	WIRING FAULT	HPD fault present longer than 10 secs	- Throttle Pot misadjusted - Throttle Pot wiring broken or shorted - Throttle Pot broken or defective
32	BRAKE ON FAULT	Electromagnetic Brake ON fault	- Brake Driver failed in ON (closed) position - Brake Coil shorted or jammed in ON (closed) position

Fault Code	Fault Name	Fault Detail	Potential Cause
33	PRECHARGE FAULT	Brake Precharge fault	- Brake Driver failed - Brake Precharge circuit damaged - MOSFET failed
34	BRAKE OFF FAULT	Electromagnetic Brake OFF fault	- Brake Driver failed in OFF (open) position - Brake Coil shorted or jammed in OFF (open) position
35	HPD FAULT	High Pedal Disable fault	- Improper sequence of throttle, KSI, push, or inhibit inputs - Throttle Pot misadjusted
41	CURRENT SENSE FAULT	Current sensor out of range	- Short circuit in drive motor or wiring - Controller failure
42	HARDWARE FAILSAFE	Drive motor voltage out of range	- Drive motor voltage does not correspond to throttle setting - Short circuit in drive motor or wiring - Controller failure
43	EE CHECKSUM FAULT	EEPROM fault	- EEPROM (electrically erasable programmable read-only memory) failure
44	NULL	-	-
45	BATTERY DISCONNECT	Battery disconnected fault	- Battery is not connected - Battery has failed - Connection to battery is poor or broken

4.4.9 Wiring diagram

ABBR.	MEANING	ABBR.	MEANING
PM	PUMP MOTOR	N	NEGATIVE
PC	PUMP CONTACTOR	EB	ELECTROMAGNETIC BRAKE
POT	POTENTIOMETER	SV	SOLENOID VALVE
P	POSITIVE	C	CENTER

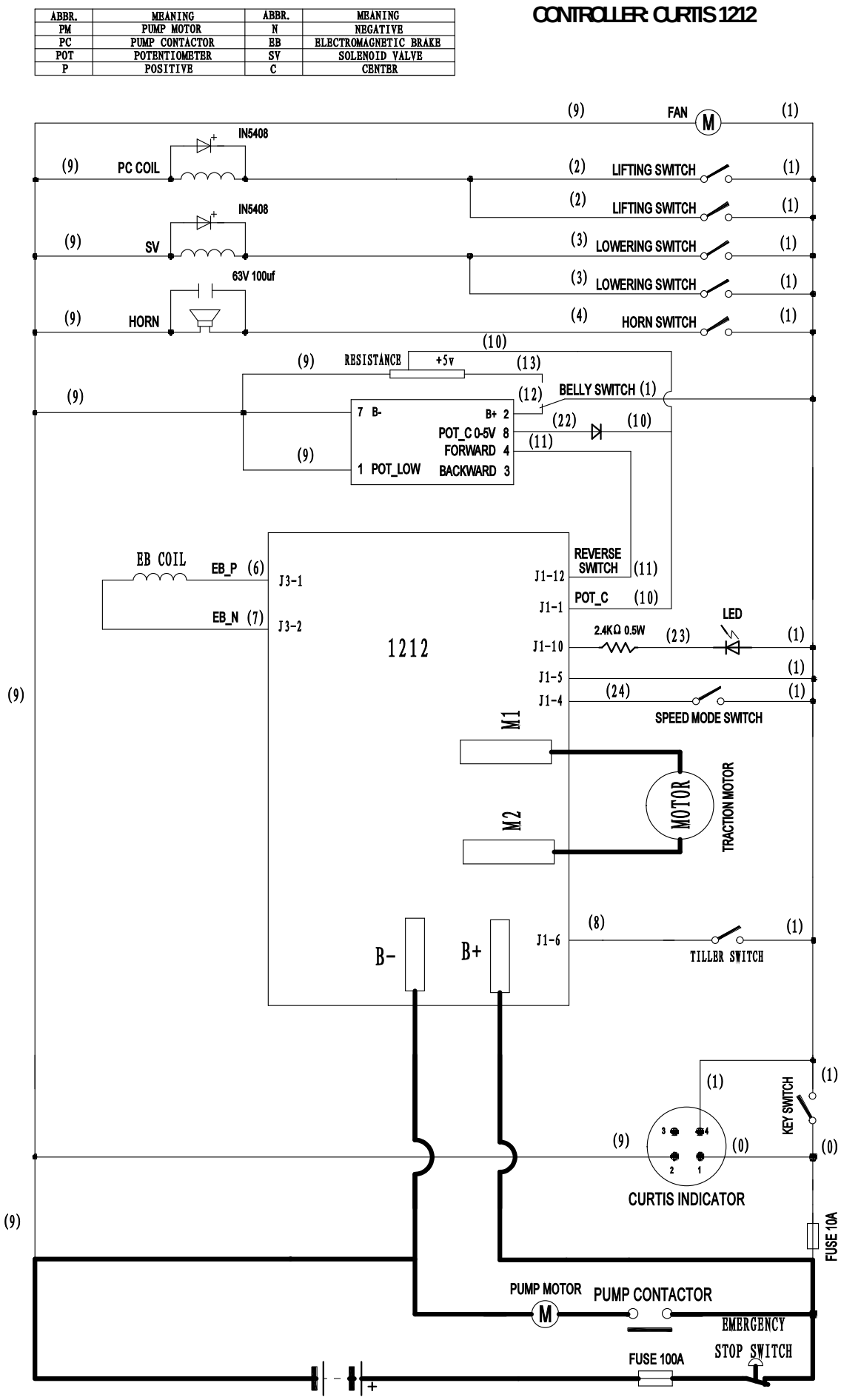

4.5 Lift & Hydraulic Systems

4.5.1 Hydraulic fluid

The Quikstak hydraulic system is designed to operate using **HM46 mineral-based hydraulic fluid**, with physical lubricating and chemical properties specified by ISO6743-4. The hydraulic fluid should be topped-up quarterly and replaced annually.

4.5.1.1 Adding hydraulic fluid

Observe the following procedure to top up the hydraulic fluid.

1. Prepare the Quikstak for service and remove the fascia cover as per §4.3.
2. Unscrew and remove the filler cap from the hydraulic reservoir, as per Figure 14.
3. Use a funnel to carefully pour new hydraulic fluid into the reservoir until the fill marking shows between **four and five litres**.
4. Replace the filler cap and fascia cover.

Figure 14

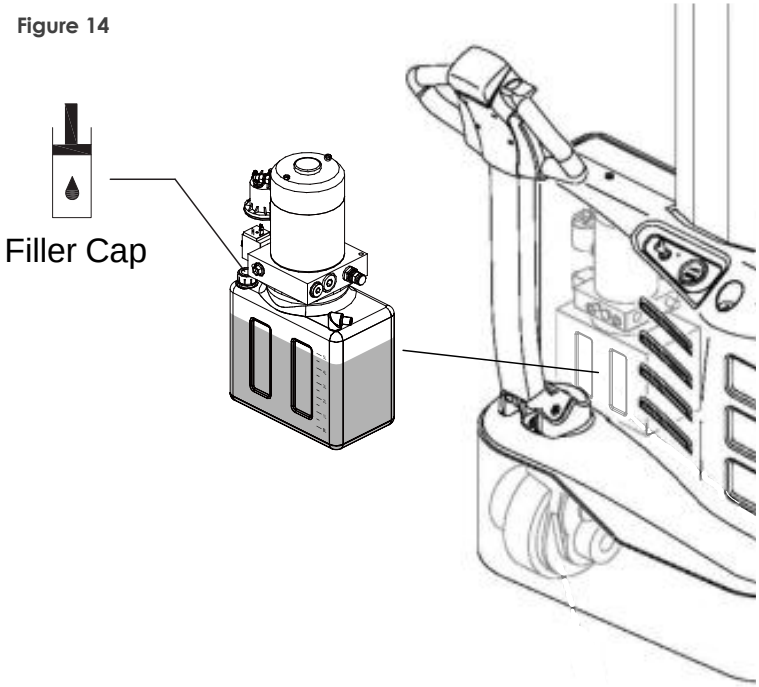

- Ensure the forks are completely lowered before replacing the hydraulic fluid.
- Do not mix hydraulic fluids of different grades.
- Do not add used or impure hydraulic fluid.
- Do not fill the reservoir beyond the maximum fill marking (5 litres).
- Always store and handle hydraulic fluids in accordance with the manufacturer's recommendations and all applicable regulations.

4.5.2 Powerpack 1030381549

The hydraulic powerpack can be supplied as a complete unit, with the motor, pump, oil tank, and control valves all mounted into a central manifold.

4.5.3 Lift motor 1030381538

The hydraulic pump is driven by a 24VDC 2.2kW lift motor which generates 9.0Nm of torque at 2300rpm, drawing up to 140 Amps of current. A motor solenoid (starter relay) is used to limit the current draw when the motor is started.

4.5.4 Control valves

The hydraulic system has four primary control valves as described below, all of which are mounted into the central manifold.

4.5.4.1 Check valve 1030381546

This is a one-way valve which prevents oil from leaking back through the hydraulic pump when the motor is stopped.

4.5.4.2 *Pressure-relief valve* 1030381547

This is a spring-loaded valve which allows oil to flow back into the reservoir when the hydraulic pressure exceeds its rated limit – usually from attempting to lift an excessive load, or trying to raise the forks when they are already at the upper limit.

4.5.4.3 *Lowering valve* 1030381518

This is a solenoid-operated valve which opens when the LOWER circuit is activated, allowing oil to flow back to the reservoir and lowering the forks.

4.5.4.4 *Lowering-speed valve* 1030381551

This is a pressure-compensating valve which limits the maximum flow rate of oil passing back to the reservoir, thus regulating the descent speed of the forks (regardless of the load).

4.5.5 *Lift ram* 1.6m lift 1030381540 1.9m lift 1030381542

The Quikstak has a single lift ram of the single-action displacement type. The ram has a Ø35mm chrome bar, a set of wipers and seals 1030381520, and a roller 1030381553 to transfer motion to the roller chain. Hydraulic lines run from the powerpack to the lift ram.

4.5.6 *Roller chain* 1.6m lift 1030381541 1.9m lift 1030381543

The Quikstak is fitted with a heavy-duty roller chain, which passes over the ram roller to transfer lifting motion to the fork carriage. An adjustable chain-anchor allows the effective length of the roller chain to be adjusted if necessary.

> ⚠ If the roller chain has too much effective length, the maximum lifting height will be reduced; conversely, if the chain is too short, the forks will not lower right to the ground.

4.5.6.1 *Adjusting the chain length*

Observe the following procedure to adjust the roller chain:

1. Park the Quikstak (with no load) as per §2.6, taking particular care to lower the forks completely, remove the key from the key-switch and depress the EMERGENCY STOP.
2. Unscrew and remove the four screws holding the perspex guard panel onto the mast, and remove the panel.
3. Loosen the third M16×1.5 locknut at the bottom of the chain-anchor bolt.
4. Shorten or lengthen the chain as required:
    a. To shorten the chain, adjust the first locknut (above the anchor plate) upwards as desired, followed by the second locknut (below the anchor plate). This will pull the anchor bolt downwards a corresponding distance, shortening the chain and increasing the maximum lift height.
    b. To lengthen the chain, adjust the second locknut (below the anchor plate) downwards as desired, followed by the first locknut (above the anchor plate). This will push the anchor bolt upwards a corresponding distance, lengthening the chain and allowing the forks to descend further.
5. Once adjustment is complete, check that both the first and second locknuts are tight against the anchor plate, then re-tighten the third locknut.
6. Raise and lower the forks completely to test the travel before refitting the perspex guard panel.

> ⚠ Keep hands well away from the lift ram and chains when testing with guarding removed.

4.5.7 Forks Pair 0320040008

As standard, the Quikstak is fitted with two 1070x100x35mm ITA Class II forks rated to lift 1700kg at 600mm load centre. These can be removed and replaced with any ITA Class II compliant forks or attachments if required.

The position of the forks can be adjusted to suit different pallets. The minimum fork separation is ~200mm, and the maximum fork separation is ~765mm.

4.5.7.1 Adjusting the fork position

Observe the following procedure to adjust the position of the Quikstak forks:

1. Withdraw the fork's lock-pin from the mounting rail, and rotate it 180 degrees to prevent it from re-locking.
2. Slide the fork along the mounting rail to the desired position.
3. Rotate the lock-pin to its original position, and slide the fork further in either direction until the pin locks into one of the notches in the mounting rail.

The forks can also be removed altogether to minimise volume for shipping.

4.6 Drive & Mechanical Systems Motor, gearbox & wheel assembly 1030381535

4.6.1 Drive motor

The Quikstak is fitted with an 0.65kW DC electric motor delivering power to the drive wheel through a gearbox (§4.6.2). The motor is controlled by a Curtis 1212 traction controller (§4.4.8), which allows it to be used for regenerative braking.

4.6.2 Gearbox

A drive gearbox is used to transfer energy from the motor to the drive wheel. The gearbox is sealed and maintenance-free, but should be lubricated annually or every 1000 hours with a **mineral-based grease with Lithium and Molybdenum Disulphide (MoS_2) additives.**

4.6.2.1 Greasing the gearbox

Observe the following procedure to grease the drive gearbox.

1. Prepare the Quikstak for service and remove the outer cover all as per §4.3.
2. Unscrew and remove the secondary cover above the drive wheel assembly.
3. Use a grease gun to inject **~110 grams of mineral-based MoS2 grease** into the grease nipple, as shown by Figure 15.
4. Replace the secondary cover and outer cover.

Figure 15

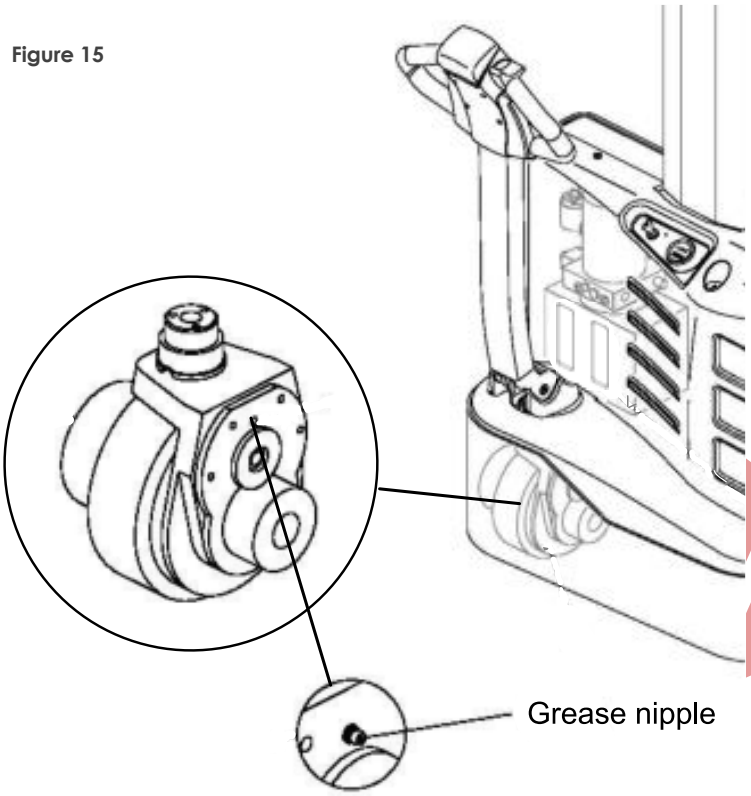

4.6.3 *Electromagnetic brake* 1030381526

The Quikstak is fitted with an electromagnetic brake manufactured by INTORQ of Germany. The electromagnetic brake and drive motor (§4.6.1) are both controlled by a Curtis 1212 traction controller (§4.4.8), which allows the use of regenerative braking.

4.6.4 *Wheels & bearings* Drive wheel 1030381506 Load wheels 1030381526

The quality of the wheels and bearings affects the stability and performance of the Quikstak. When replacing the wheels only OEM parts should be used.

> ⚠ The wheels and bearings should only be serviced or replaced by a qualified technician.

4.6.5 *Straddle legs*

The Quikstak is fitted with straddle legs, which balance the stacker while allowing pallets with bottom-boards (such as CHEP pallets) to be lifted from the ground. The legs are mounted into sleeves at the base of the stacker frame, allowing the straddle width to be adjusted to suit different operating environments or pallet types.

4.6.5.1 Adjusting the straddle width

Carry out the following procedure to adjust the Quikstak straddle width:

1. Remove the weight of the stacker from the outriggers, by either;
    a. Placing a hydraulic jack beneath the front-centre of the stacker frame, and jacking it up as per §3.2 until the outrigger wheels are slightly off the ground.
    b. Affixing a sling around the crossmember at the top of the mast, and slightly lifting the entire Quikstak as per §3.3.

> ⚠ Never stand or reach beneath the Quikstak while it is lifted or jacked up.

2. Loosen and remove the three 24mm bolts securing each outrigger.
3. Slide the outriggers inwards or outwards as required;
    a. To maintain an equal distribution of load, both outriggers should always be adjusted by the same amount.
    b. The pattern of predrilled holes in each outrigger must be correctly aligned with those in the mounting sleeve before the bolts can be re-fitted. The bolt holes align in four locations, corresponding to straddle widths of **985mm/1085mm/1185mm/1285mm**.
4. Refit and firmly tighten all 24mm bolts before returning the Quikstak to service.

> ⚠ The outriggers can also be removed to minimise volume for shipping.

4.7 Quikstak Height-Levelling System

If your machine does not have a height-levelling system, please disregard this section.

4.7.1 Control panel Membrane 0790050489

The control panel for the Quikstak height-levelling system consists of an adhesive membrane, with integrated buttons and an LED lamp. A ribbon cable connects the membrane to the PLC and power supply. If damaged, the membrane can be simply replaced as a single unit.

4.7.2 PLC 0210050006

The height-levelling system is controlled by an APB-12MRDL PLC, which is mounted on a DIN rail inside the fascia. The PLC has a USB port, an LCD screen, and buttons for altering program parameters. PLC programming software is available from Simpro.

Authorisation must be obtained from Simpro before any changes are made to the PLC programming.

4.7.3 Laser sensor Sensor 0790050462 Cable 0790050463

The height-levelling system uses a Sick DT35 laser sensor mounted on the mast to measure the height of product stacked on the forks. Data from this sensor is transmitted to the PLC through a plug-n-play cable running down the mast. The sensor has a plug-n-play connection, so in the event of failure it can be replaced without removing the data cable.

4.7.4 LED strobe light 0250050151

An LED strobe light is mounted on the mast adjacent to the laser sensor. When the height-levelling system is active, this strobe provides a visual cue to personnel in the area. A variety of strobe patterns can be selected.

4.8 Preventative Maintenance Inspections

It is recommended that regular preventative maintenance inspections (PMIs) be carried out on the Quikstak. This helps ensure operator safety and extend the service life of the machine.

The Quikstak PMI schedule is divided into three parts: weekly, quarterly, and annual inspections. The relevant procedures are provided below, along with log sheets for documenting each inspection.

⚠ Operators should immediately stop using the Quikstak and request an inspection if any fault, failure, or abnormal operation is observed.

In the United Kingdom, the Lifting Operations and Lifting Equipment Regulations 1998 specifies that all workplace lifting equipment be subject to 'thorough inspection' at regular intervals. These inspections are sometimes known as LOLER checks. The following section may be used to demonstrate conformance with UK LOLER regulations.

4.8.1 Pre-inspection checklist

1. Wear suitable Personal Protective Equipment (PPE), including safety boots and protective eyewear.
2. Ensure there are no ignition sources within two metres of the stacker.
3. Remove the pallet or load and lower the forks to the ground.
4. Turn off the key switch and unplug the charging lead.
5. Remove the powerpack cover.
6. Clean the powerpack and electric circuitry with compressed air.
7. Always use height safety equipment when servicing elevated areas.

4.8.2 Inspection checklist

The following checklist includes the procedures for weekly, quarterly, and annual PMI inspections. The columns on the right indicate the interval for each item.

Category	No.	Item	Procedure	Weekly	Quarterly	Annually
Overall	1	Frame	Inspect the frame for damage and corrosion		☑	☑
	2	Decals	Check that all instruction and warning decals are affixed and legible	☑	☑	☑
Electrical Systems	3	Operating Controls	Check that the operating controls function correctly, per §2.1.1	☑	☑	☑
	4	Crush Safety Button	Check that the crush safety button functions correctly, per §2.1.1	☑	☑	☑
	5	Horn	Check that the horn Sounder 1030381530 functions correctly, per §2.1.1	☑	☑	☑
	6	Indicators	Check that the battery indicator 1030381528, hour meter and charger status LED all function correctly, per §2.1.2	☑	☑	☑
	7	Wiring looms	Visually inspect wiring for obvious damage, broken or loose connections			☑

Category	No.	Item	Procedure	Weekly	Quarterly	Annually
Electrical Systems	8	Microswitches	Check function of microswitches: - Crawl mode engages when forks are above 500mm - Electromagnetic brake engages when the tiller angle is above or below the READY zone		☑	☑
	9	Motor relay	Check lift motor relay 1030381527			☑
	10	Batteries	Inspect batteries 1030440012 for damage and leaks		☑	☑
	11	Battery terminals	Inspect battery terminals for corrosion and apply grease if necessary Check battery cables are firmly connected			☑
	12	Charging lead	Inspect charging lead 1030381534 and plug for damage and broken insulation			☑
Drive Systems	13	Overall	Drive stacker forwards and backwards, checking for abnormal behaviour or noises		☑	☑
	14	Gearbox	Grease gearbox, per §4.6.2.1			☑
	15	Electromagnetic brake	Check spacing and alignment of brake pads, per §4.6.3			☑
	16	Drive levers	Check drive levers rotate smoothly in both directions and centre when released; lubricate and/or adjust if necessary		☑	☑
	17	Tiller handle	Check that tiller quickly returns to vertical when released Gas strut 1030381512		☑	☑
	18	Wheels	Inspect wheels for wear and damage Load wheel 1030381505 Drive wheel 1030381506			☑
	19	Bearings	Check wheel bearings; lubricate or replace if necessary Load wheel bearing 1030381532 Drive wheel bearing 1030381507			☑
Lift Systems	20	Overall	Lift and lower the forks to maximum extent, checking for unusual behaviour or noises		☑	☑
	21	Hydraulic lines	Check hydraulic lines and connections for leaks and/or damage		☑	☑
	22	Hydraulic ram	Check hydraulic ram for leaks and/or damage, per §4.5.5			☑
	23	Roller chain	Inspect roller chain for corrosion; lubricate if necessary Check the chain length; adjust if necessary, per §4.5.6.1			☑
	24	Mast rollers	Inspect the mast rollers 1030381531 for wear and damage			☑
	25	Forks	Inspect the forks 0320040008 (or other attachment) for wear and damage			☑
	26	Hydraulic fluid	Check the level of hydraulic fluid; top-up if necessary, per §4.5.1.1		☑	
	27		Drain and replace the hydraulic fluid, per §4.5.1.1			☑
	28	Hydraulic suction filter	Check and clean the hydraulic suction filter 1030381552; replace if necessary			☑

4.8.3 *Inspection log sheets*

Date	Name	Location	Checks complete	Maintenance carried out	Parts used

Date	Name	Location	Checks complete	Maintenance carried out	Parts used

Date	Name	Location	Checks complete	Maintenance carried out	Parts used

Date	Name	Location	Checks complete	Maintenance carried out	Parts used

5. Spare Parts

The following table includes only the most common Quikstak parts at the date of publication. Additional parts, accessories and prices may be viewed at the following web address: https://shop.simpro.world/category/1243-spare-parts-explorer

Cat.	Partcode	Description	QTY*	CSK†
Tiller Handle, Controls & Microswitches	1030381536	Tiller Head Assembly, complete	1	
	1030381510	Tiller Head Cap Assembly, plastic, with wiring loom	1	
	1030381524	Tiller Controls Wiring Assembly, with plug, loom and 5x microswitches	1	
	1030381522	Microswitch II – Control button switch (Up/Down/Horn)	5	✓
	1030381525	Drive Control Potentiometer Assembly	1	
	1030381515	Crush Safety Button, red plastic (for end of tiller handle)	1	
	1030381513	Wiring Loom for Crush Safety Button	1	
	1030381516	Emergency Stop Button, with heavy-duty contactors	1	✓
	1030381514	Key-Switch Assembly, complete with loom	1	✓
	1030381528	Battery Indicator, with LED strip and LCD hour meter	1	✓
	1030381530	Horn Sounder	1	✓
	1030381517	Tiller-Elevation Switch Assembly, complete with loom	1	
	1030381521	Microswitch I – Tiller-elevation switch	1	✓
	1030381512	Gas Strut for tiller	1	✓
	1030381523	Microswitch III – Fork-elevation switch	1	✓
Electrical System	1030440012	Battery, 12V/85Ah, AGM (case 256mm long x 165mm wide x 210mm high)	2	
	1030381519	Charger, 24V/10A, with looms and plugs (ESCH24V10A)	1	
	1030381534	Charging Lead, extendable, with IEC Type I plug	1	
	1030381544	Fuse, 150A (for electric motors)	1	✓
	1030381545	Fuse, 10A (for traction controller)	1	✓
Drive & Mechanical Systems	1030381529	Traction Controller, Curtis 1212	1	
	1030381535	Drive Motor, Gearbox & Wheel Assembly	1	
	1030381511	Gearbox Oil Seal Ring, Ø155×173×10	1	
	1030381526	Electromagnetic Brake Assembly	1	
	1030381506	Drive Wheel, Ø210mm x 70mm wide, 10mm PU tread	1	
	1030381507	Drive Wheel Bearing, 61824-2RS	1	
	1030381533	Balance Castor Assembly II	1	
	1030381505	Load Wheel, Ø100mm x 50mm wide (for balance castor and straddle legs)	5	✓
	1030381532	Load Wheel Bearing, 6205-2Z (for balance castor and straddle legs)	5	✓
Lift & Hydraulic Systems	1030381537	Hydraulic Pump Assembly, complete with manifold and valves	1	
	1030381550	Hydraulic Pump only	1	
	1030381552	Hydraulic Suction Filter	1	✓
	1030381518	Solenoid Lowering Valve	1	✓
	1030381538	Lift Motor, 24VDC/2.2kW	1	✓
	1030381539	Motor Brush, for 24VDC lift motor	1	✓
	1030381527	Motor Solenoid, starter relay for 24VDC lift motor	1	✓
	1030381540	Ram Assembly, 1.6m lift	1	
	1030381542	Ram Assembly, 1.9m lift	1	
	1030381520	Ram Seal Kit (includes 1x Ring Wiper, 1x O-Ring and 1x Rod Packer)	1	✓
	1030381541	Roller Chain Assembly, 1.6m lift	1	
	1030381543	Roller Chain Assembly, 1.9m lift	1	
	1030381531	Mast Roller Assembly, single	4	

Cat.	Partcode	Description	QTY*	CSK†
Quikstak Height-Levelling System	0790050489	Quikstak Control Panel Membrane, with 2x buttons, LED and ribbon cable	1	☑
	0210050006	PLC, 12-24VDC, with 8x digital/analog inputs & 8x relay outputs (APB-12MRDL)	1	☑
	0790050462	Laser Sensor (Sick DT35)	1	☑
	0790050463	Laser Sensor Cable, 2m long with female plug	1	
	0250050151	LED Strobe Light, 24VDC	1	
	0790050461	DIN-Rail, 35 x 7.5mm, 180mm long	1	
	0250050159	Voltage Regulator, 5VDC 500mA	1	

* Quantity per Machine † Critical Spares Kit (suitable for up to four machines)

6. Safety Assessment

The Quikstak has been designed to be as safe as possible without restricting the ease-of-use and versatility of the machine.

⚠ Before the Quikstak is used for the first time, a site-specific Hazard and Risk Assessment should be completed as per §6.3.

6.1 Safety features

Safety features of the standard Quikstak design include:

1. A perspex guarding panel which limits access to moving parts.
2. Straddle outriggers which provide a large, stable floor footprint.
3. A speed-limiter which automatically engages when the forks are above 500mm.
4. A crush-safety button on the tiller which, if pressed against the operator's body, quickly reverses the direction of travel.
5. An EMERGENCY STOP button which if pressed immediately disable the stacker.
6. An overload valve which prevents lifting excessive loads (more than 1000kg).
7. A pressure-compensating lowering valve which automatically regulates the lowering speed regardless of the weight of the load.
8. An LED strobe light which is flashes when QUIKSTAK MODE is engaged, providing a visual cue that the forks are under automatic control.
9. A PLC control program which prevents the forks from descending below 200mm when QUIKSTAK MODE is engaged.

6.2 Reasonably foreseeable misuse

Reasonably foreseeable misuse considered in the standard Quikstak design includes:

1. Attempts to use the machine by untrained operators;
2. Attempts to lift unbalanced or poorly-built pallets;
3. Attempts to use the machine with unapproved attachments;
4. Attempts to ride on the machine while travelling
5. Attempts to clean the machine without following proper procedures.

6.3 ISO12100 Hazard and Risk Assessment Guide

In most jurisdictions, health and safety legislation requires machinery owners to assess the safety of their machinery **in the actual conditions of use**, considering all relevant factors such as the area the machine is to be used, the training of operators, the proximity of other persons, frequency of use, etc.

The following section uses the **ISO12100:2010 risk assessment model** to assist Quikstak owners in carrying out this process. Hazards intrinsic to the Quikstak are pre-filled, while blank spaces are provided to assess application-specific hazards.

ISO12100:2010 'Risk assessment and risk reduction', is a standard issued by the International Standards Organisation. It describes procedures for identifying hazards and estimating and evaluating risks during relevant phases of a machine life cycle.

As with all powered industrial equipment, some hazards will remain despite any precautions undertaken by the manufacturer or owner of the machine. It is essential that operators are aware of these residual hazards and what they must do to prevent harm to themselves or to others, as set out in §6.3.3.

6.3.1 The ISO12100 risk assessment model

In the ISO12100 risk assessment model, each identified hazard is given a **Risk Factor**, from which is derived a **Risk Evaluation**. These parameters are assessed as follows.

6.3.1.1 Determining Risk Factor

The Risk Factor associated with a given hazard may be calculated using the following table, with the formula: **LO x FE x DPH x NP = RISK FACTOR**

LO	Likelihood of Occurrence	FE	Frequency of Exposure	DPH	Degree of Possible Harm	NP	Number of Persons at risk
0.1	Impossible, or possible only in extreme circumstances	0.1	Infrequently	0.1	Scratch or bruise	1	1 – 2 persons
0.5	Highly unlikely though conceivable	0.2	Annually	0.5	Laceration, mild ill-health	2	3 – 7 persons
1	Unlikely but could occur	1	Monthly	1	Break minor bone or temporary illness	4	8 – 15 persons
2	Possible but unusual	1.5	Weekly	2	Break major bone or permanent illness	8	16 – 50 persons
5	Even chance – could happen	2.5	Daily	4	Loss of 1 limb or eye/temporary serious illness	12	51 or more persons
8	Probable – not surprising	4	Hourly	8	Loss of 2 limbs or eyes/permanent serious illness	-	-
10	Likely or to be expected	5	Constantly	15	Fatality	-	-
15	Certain or beyond doubt	-	-	-	-	-	-

6.3.1.2 Risk Evaluation

Once the Risk Factor is determined, the risk can be evaluated using the following table.

Risk Factor	0-1	2-5	6-10	11-50	51-100	101-500	501-1000	1001 +
Evaluation	Negligible	Very Low	Low	Significant	High	Very High	Extreme	Unacceptable

Risks evaluated as Very High, Extreme or Unacceptable are likely to require customised operating procedures or additional safety functions.

6.3.2 *Identified Hazards*

The following hazards have been identified that are intrinsic to the Quikstak design. For each hazard a Risk Evaluation has been completed and control measures described.

Blank spaces are also provided to identify, assess, and describe control measures for application- or site-specific hazards.

Entanglement or amputation of fingers or limbs in moving parts											
Operator	LO:	1	FE:	4	DPH:	4	NP:	1	Risk Factor:	16
	The Quikstak is designed so that potential trapping points and shear hazards are eliminated, minimized, or isolated by guarding. When QUIKSTAK MODE is enabled, the forks will not descend below 200mm without manual control input.									
Other persons	LO:	1	FE:	2.5	DPH:	4	NP:	1	Risk Factor:	10
	Other persons will less frequently be in proximity to moving parts.									
Control measures	Operators are responsible to obey warning signs fitted to the machine and instructions regarding keeping clear of all moving parts.									
Comments										
Being struck by objects falling off the forks										
Operator	LO:	1	FE:	4	DPH:	1	NP:	1	Risk Factor:	4
	When being used as pallet stacker, the Operator is shielded from the load by the body and mast of the stacker. When using QUIKSTAK MODE it is possible for product to fall off the pallet and strike the operator.									
Other persons	LO:	1	FE:	4	DPH:	1	NP:	1	Risk Factor:	4
	When being used as a pallet stacker, it is possible for product to fall off the pallet and strike persons standing near the stacker.									
Control measures	Product must be stacked carefully, and the load should be lifted no more than 500mm when being transported. Ramps should always be traversed in a direction which causes the load to recline against the fork carriage. Operators are responsible to keep themselves and others well clear of the forks when lifting loads higher than 1000mm.									
Comments	Low-speed mode is automatically engaged when the forks are raised above 500mm.									
Crushing due to rapid and/or uncontrolled descent of the forks										
Operator	LO:	0.5	FE:	4	DPH:	8	NP:	1	Risk Factor:	16
	There is no physical guarding preventing personnel from accessing the area beneath the forks. A pressure-compensating valve limits the lowering speed of the forks in normal operation, and a hose-burst valve prevents the forks from falling in the event of a hydraulic failure. When QUIKSTAK MODE is enabled, the forks will not descend below 200mm without manual control input. Significant safety margins ensure that the probability of failure of any steel, hydraulic, or control parts failing is very low.									
Other persons	LO:	0.5	FE:	2.5	DPH:	8	NP:	1	Risk Factor:	10
	Other persons will less frequently be in proximity to the forks.									
Control measures	Operators are responsible to obey instructions and warnings regarding keeping themselves and others away from the area beneath the forks at all times. The Quikstak must be regularly maintained, and all faults promptly repaired.									
Comments										

Crushing due to the machine falling over										
Operator	LO:	0.1	FE:	4	DPH:	8	NP:	1	Risk Factor:	3.2
	The Quikstak has a large floor footprint, outrigger legs and a maximum lift height of 1.9 metres, making the machine very stable in normal operation.									
Other persons	LO:	0.1	FE:	2.5	DPH:	8	NP:	2	Risk Factor:	4
	As above.									
Control measures	The Quikstak should not be operated on heavily sloping ground or ramps with a slope ratio greater than 10%. The Quikstak should not be operated on soft or unstable surfaces. If the Quikstak is being operated on an elevated platform or loading dock, an appropriate safety distance should be maintained from the edge.									
Comments	Low-speed mode is automatically engaged when the forks are raised above 500mm.									
Electrocution or electric shock										
Operator	LO:	1	FE:	2.5	DPH:	15	NP:	1	Risk Factor:	37.5
	Some risk is always present when using equipment with a mains charging lead.									
Other persons	LO:	1	FE:	1.5	DPH:	15	NP:	1	Risk Factor:	22.5
	Other persons will less frequently interact with the charging lead.									
Control measures	The charging lead should be inspected frequently, and repaired or replaced if damaged. A Residual Current Device (RCD) should be fitted to all power outlets. Electrical service and maintenance work should only be carried out by authorised, qualified technicians.									
Comments	All extension leads and power cables should be tested and tagged by a registered electrician at regular intervals.									
Damage to skin when operated in extreme environments										
Operator	LO:	1	FE:	4	DPH:	1	NP:	1	Risk Factor:	4
	If the Quikstak is operated in extreme temperatures, metal parts may burn, freeze, or otherwise harm skin.									
Other persons	LO:	1	FE:	2.5	DPH:	1	NP:	1	Risk Factor:	2.5
	Other persons will less frequently be in proximity to the stacker.									
Control measures	All personnel should wear appropriate PPE when working in very hot or cold environments. The Quikstak should not be operated outdoors in extreme weather conditions.									
Comments	See §1.8 for Quikstak environmental limitations.									
Lift motor jamming on due to contacts fusing shut or control system failure										
Operator	LO:	1	FE:	4	DPH:	0.1	NP:	1	Risk Factor:	0.4
	If the lift motor is jammed on, the forks will ascend to the maximum height and then stop. The hydraulic fluid will start bypassing through the overload valve back to the reservoir. No hazardous failure will result. Depressing the Emergency Stop will immediately shut off the motor and stop the forks from ascending (regardless of other control system failures).									
Other persons	LO:	1	FE:	2.5	DPH:	0.1	NP:	1	Risk Factor:	0.25
	Other persons will less frequently be in proximity to the stacker.									
Control measures	The Quikstak must be regularly maintained, and all faults promptly repaired.									
Comments										

Lowering valve jamming open due to stuck debris or solenoid failure										
Operator	LO:	1	FE:	4	DPH:	1	NP:	1	Risk Factor:	4
	If the lowering valve is physically jammed open, the forks will descend to the ground at a controlled rate and then stop (even if the Emergency Stop is pressed). It will not be possible to lift the forks off the ground until the fault is repaired. No other hazardous failure will result.									
Other persons	LO:	1	FE:	2.5	DPH:	1	NP:	1	Risk Factor:	2.5
	Other persons will less frequently be in proximity to the stacker.									
Control measures	Operators are responsible to obey instructions and warnings regarding keeping themselves and others away from the area beneath the forks at all times. The hydraulic fluid should be drained and replaced on an annual basis. The Quikstak must be regularly maintained, and any faults promptly repaired.									
Comments										
Lowering valve jamming open due to control system failure										
Operator	LO:	0.5	FE:	4	DPH:	1	NP:	1	Risk Factor:	2
	If the lowering valve is jammed open due to a control circuit failure, the forks will descend to the ground at a controlled rate and then stop. No other hazardous failure will result. Depressing the Emergency Stop will immediately close the lowering valve and stop the forks from descending (regardless of other control system failures).									
Other persons	LO:	0.5	FE:	2.5	DPH:	1	NP:	1	Risk Factor:	1.25
	Other persons will less frequently be in proximity to the stacker.									
Control measures	Operators are responsible to obey instructions and warnings regarding keeping themselves and others away from the area beneath the forks at all times. The Quikstak must be regularly maintained, and any faults promptly repaired.									
Comments										
Application-specific hazard:										
Operator	LO:		FE:		DPH:		NP:		Risk Factor:	
Other persons	LO:		FE:		DPH:		NP:		Risk Factor:	
Control measures										
Comments										
Application-specific hazard:										
Operator	LO:		FE:		DPH:		NP:		Risk Factor:	
Other persons	LO:		FE:		DPH:		NP:		Risk Factor:	
Control measures										
Comments										

Application-specific hazard:										
Operator	LO:		FE:		DPH:		NP:		Risk Factor:	
Other persons	LO:		FE:		DPH:		NP:		Risk Factor:	
Control measures										
Comments										
Application-specific hazard:										
Operator	LO:		FE:		DPH:		NP:		Risk Factor:	
Other persons	LO:		FE:		DPH:		NP:		Risk Factor:	
Control measures										
Comments										

6.3.3 Residual Hazards

As with all powered lifting equipment, some 'residual hazards' may be present despite any interlocks, guarding or other safety systems that may be implemented.

The machinery owner has a legal responsibility to take **all reasonable precautions** to eliminate, isolate, or minimize these residual hazards. This may include:

- Monitoring and enforcing the training of operators
- Design and implementation of Standard Operating Procedures
- Using rewards and/or disciplinary measures to encourage safe behaviours
- Posting signage, floor marking, or other warnings as appropriate
- Encouraging a culture of safety within the workplace

7. Technical Data

	Basic Parameters				
1.1	Manufactur er			EP // Simpro	EP // Simpro
1.2	Model designation			QS10MM-1600	QS10MM-1900
1.3	Drive unit			Electric	Electric
1.4	Operator			Pedestrian	Pedestrian
1.5	Rated capacity	Q	kg	1000	1000
1.6	Load center distance	c	mm	600	600
1.8	Load distance, centr e of drive axle to fork	x	mm	850	850
1.9	Wheelbase	y	mm	1210	1210
	Weight				
2.1	Service weight (including battery)		kg	543	573
2.2	Axle loading, laden, Drive end/Load end		kg	683/860	697/876
2.3	Axle loading, unladen, Drive end/Load end		kg	420/123	434/139
	Chassis and Wheels				
3.1	Tyre type, Drive wheels/Load wheels			PU/PU	PU/PU
3.2	Tyre size, Drive wheels (diameter*width)		mm	Φ210x70	Φ210x70
3.3	Tyre size, Load wheels (diameter*width)		mm	Φ100x50	Φ100x50
3.4	Tyre size, Castor wheels (diameter*width)		mm	Φ100x50	Φ100x50
3.5	Wheels, quantity , Drive + Castor/Load		mm	1x+ 1/ 4	1x+ 1/ 4
3.6	Track width, fr ont, Drive end	b10	mm	533	533
3.7	Track width, r ear, Load end	b11	mm	1060/1160/ 1260 /1360	1060/1160/ 1260 /1360
	Dimensions				
4.1	Tilt of mast/fork carriage forward/backward	α/β	°	-	-
4.2	Height, mast lowered	h1	mm	1940	2290
4.3	Free lift	h2	mm	1387	1737
4.4	Lift height	h3	mm	1560	1910
4.5	Height, mast extended	h4	mm	2053	2403
4.6	Initial lift	h5	mm	-	-
4.9	Height, tiller (engaged) min./max.	h14	mm	860/ 1200	860/ 1200
4.1	Height, outriggers	h8	mm	100	100
4.15	Lowered height	h13	mm	60	60
4.19	Overall length	l1	mm	1570	1570
4.2	Length to face of forks	l2	mm	500	500
4.21	Overall width	b1/ b2	mm	1135/1235/1335/1435	1135/1235/ 1335 /1435
4.22	Fork dimensions	s/ e/ l	mm	35/ 100/ 1070	35/ 100/ 1070
4.24	Fork carriage width	b3	mm	780	780
4.25	Outside width of the forks	b5	mm	200~765	200~765
4.26	Outrigger str addle width	b4	mm	975/1075/1175/1275	975/1075/1175/1275
4.31	Ground clear ance, laden, below mast	m1	mm	40	40
4.32	Ground clear ance, center of wheelbase	m2	mm	40	40
4.34.1	Aisle width for pallets 1000 × 1200 cr ossways	Ast	mm	2175	2175
4.34.2	Aisle width for pallets 800 × 1200 lengthways	Ast	mm	2100	2100
4.35	Turning radius	Wa	mm	1329	1329
	Performance				
5.1	Travel speed, laden/unladen		km/ h	4/4.5	4/4.5
5.2	Lifting speed, laden/unladen		m/ s	0.12/ 0.22	0.12/ 0.22
5.3	Lowering speed, laden/unladen		m/ s	0.12/ 0.11	0.12/ 0.11
5.8	Max. gradeability, laden/unladen		%	3 / 10	3 / 10
5.1	Service brake type			Electromagnetic	Electromagnetic
	Powerpack Specifications				
6.1	Drive motor rating S2 60 min		kW	0.65	0.65
6.2	Lift motor rating at S3 15%		kW	2.2	2.2
6.3	Maximum allowable battery dimensions		mm	270x180x230	270x180x230
6.4	Battery voltage/nominal capacity K20		V/ Ah	2x12/85	2x12/85
6.5	Battery weight		kg	2x25	2x25
	Other data				
8.1	Drive unit type			DC	DC
10.5	Steering type			Mechanical	Mechanical
10.7	Sound level at the driver's ear		dB(A)	74	74

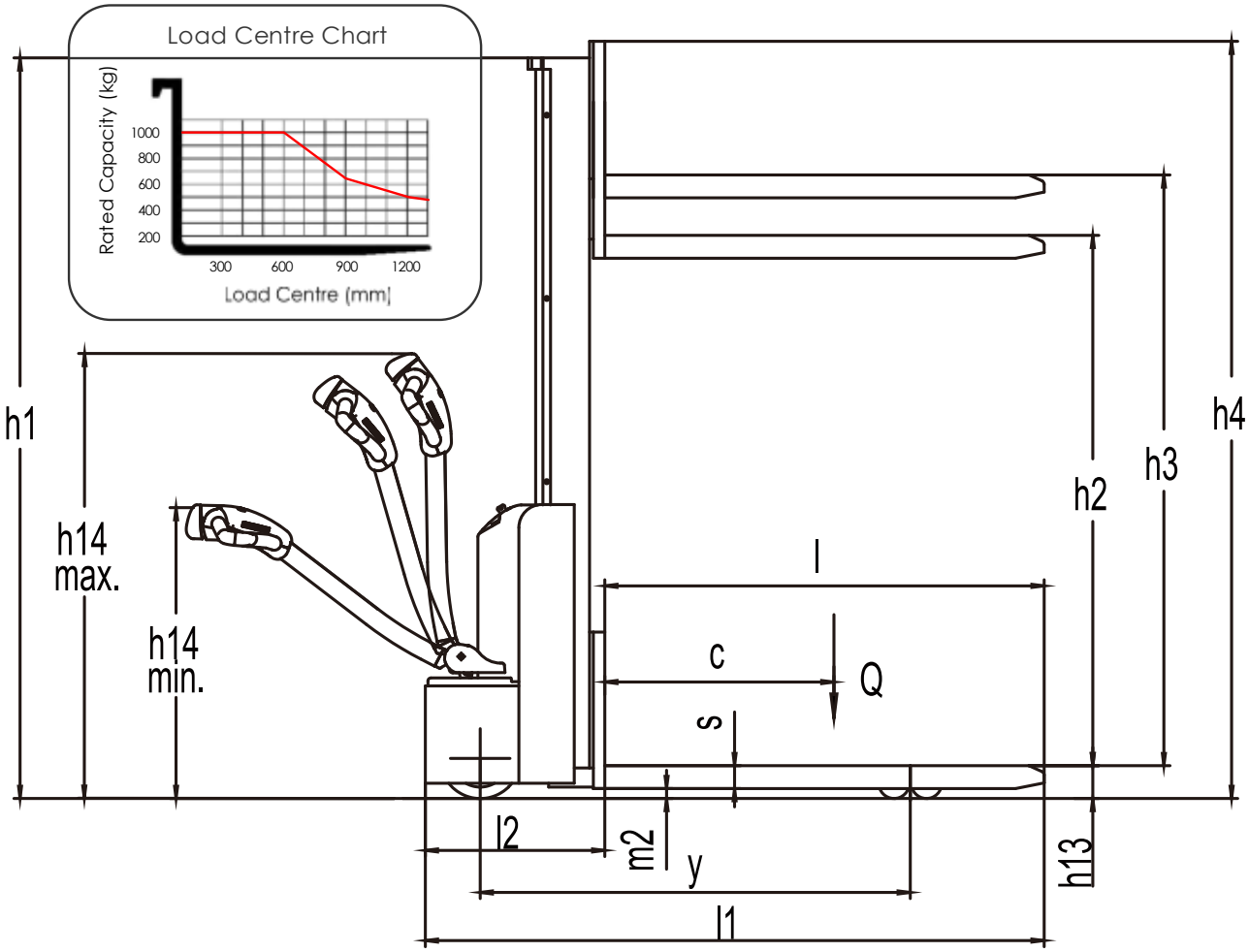
Load Centre Chart
Rated Capacity (kg)
1000
800
600
400
200
300
600
900
1200
Load Centre (mm)
h1
h14
max.
h14
min.
h2
h3
h4
l
c
Q
s
l2
m2
y
l1
h13

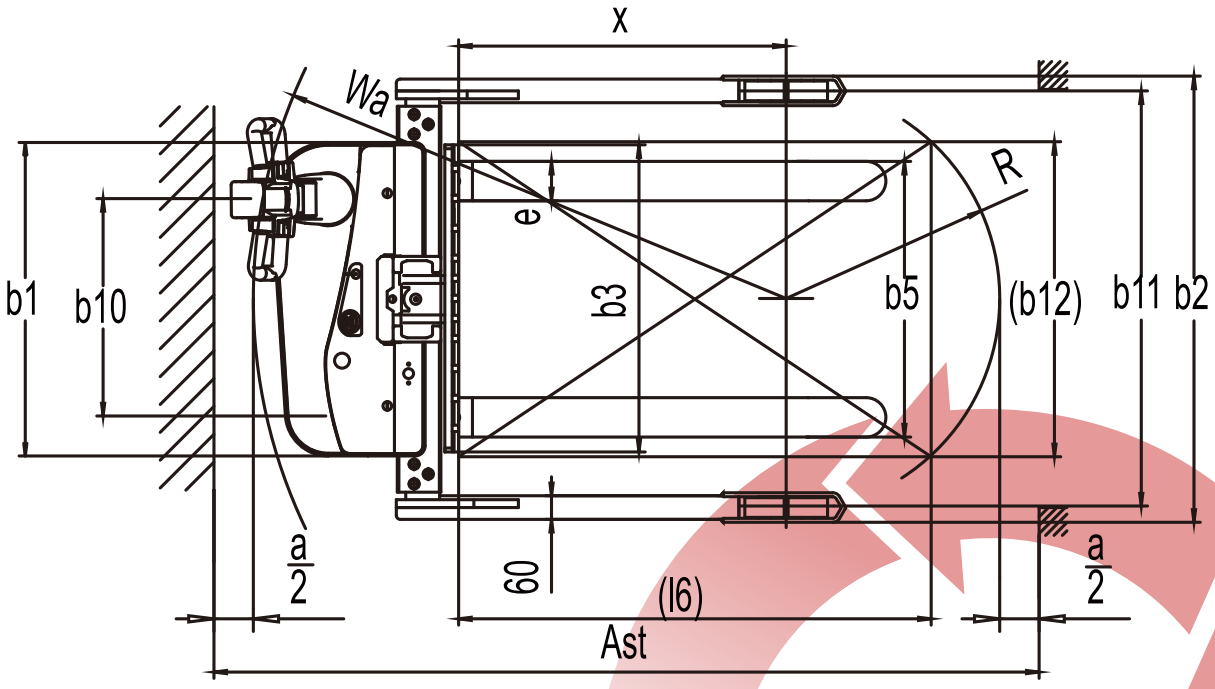
x
Wa
R
e
b1
b10
b3
b5
(b12)
b11
b2
a
2
60
(l6)
Ast
a
2

8. Warranty

8.1 Definitions

1. "Simpro" means Simpro Handling Equipment Limited, New Zealand Company No. 1827916.
2. "Agent" means a person or company authorized by Simpro to sell a Product.
3. "Service Agent" means a person or company authorized by Simpro to repair a Product.
4. "End User" means the first purchaser of a Product from a Sales Agent authorised by Simpro to sell the Product.
5. "Warranty" means the commitment that Simpro has to guarantee the workmanship and componentry to any End User of Products manufactured and sold by Simpro.
6. "Warranty Claim" means an application from an Agent to Simpro to be reimbursed for expenses relating to repairs done to remedy a fault with a Simpro Product.
7. "Warranty Period" means the length of time that Simpro undertakes to guarantee a Product.
8. "Back to Base" means that the costs associated with the transporting of a Product between the Service Agent and the End User is the End Users responsibility.
9. "Standard Products" means any Product displayed as a standard product on the Simpro website, https://simpro.world/.
10. "Part" and "Parts" refer to components of a Product.
11. "Minor Fault" means a fault or defect that requires less than one hour to rectify
12. "Instruction Handbook" means a document so titled that provides brief information and guidance on the operation of the Product for commonly performed functions.
13. "Service Manual" means a document so titled that provides comprehensive information and guidance for service, repairs, and maintenance.
14. "Warranty Registration Process" means the process of an End User registering their product with Simpro. This may be done using the web form here: https://simpro.world/support/warranty-registration
15. "Application for Warranty Consideration Form" means the system used to file a Warranty Claim with Simpro. This may be done using the web form here: https://simpro.world/support/warranty-claim.

8.2 Coverage

1. Simpro provides a 24-month Back to Base Warranty on all Standard Products unless alternative terms have been agreed to in writing.
2. The Warranty terms and conditions on custom-built and non-standard machines are generally specified on quotations, and placing an order implies acceptance of the Warranty terms. If no specific Warranty details have been provided, the standard terms and conditions will apply.
3. The 24-month Warranty period shall be taken from the date the machine first leaves the Agent's premises, whether sold or just supplied for trial. The Agent shall keep accurate records of the date of all machine trials, sales. etc.
4. Simpro will, at its option, repair or replace any items that fail or prove defective within the Warranty period.
5. Simpro's liability under the terms of this Warranty shall be limited to remedying any fault that occurs on machines it has manufactured or supplied, and shall not cover any consequential loss or damage.
6. The Warranty on batteries is for 12 months only, and is distinct from the warranty on the rest of the machine. Information on maximising battery life is provided in the User Manual.

8.3 Exclusions

1. Simpro will not recognise a Warranty Claim against a machine where payment to Simpro for that machine is outstanding. If a Warranty Claim is made before payment is due, the full payment must be made on the due date. The Warranty Claim, if accepted, will be credited at a later date.

2. Warranty Claims may not be recognized unless the Warranty Registration Process has been completed. If not done at the time of sale, this should be done at the time of the Warranty Claim. If warranty registration has not been completed, proof of purchase may be required.
3. Damage caused or contributed to by misuse, abuse, accident, unauthorised repairs or modifications, or failure to use the machine in accordance with instructions is specifically excluded.
4. Travelling time and mileage are specifically excluded from the Simpro warranty coverage. However under certain circumstances Simpro at its discretion may contribute to these costs. Authorisation must be obtained from Simpro prior to any such Warranty Claim. This does not prohibit an Agent offering more extensive Warranty cover, outside of this Warranty, as negotiated between the Agent and the End User.

8.4 End User claim procedure

1. Where a fault or breakdown appears to have occurred the End User should, if applicable, first consult the Quick Troubleshooting Guide section of the User Manual provided with each machine, to ascertain the cause of the fault and remedy if possible. This information may also be accessed on the Simpro Support website: http://support.simpro.world.
2. If the fault is not able to be remedied, the End User should contact the Agent who sold the machine, and explain as fully as possible the fault, including all relevant factors such as:-
    a. Did the fault occur suddenly, or did it develop over a period of time?
    b. Was the machine being used at the time the fault first occurred?
    c. Is the fault intermittent?
    d. Are the batteries fully charged?
3. If repair is urgent, or the Agent cannot be contacted, the End User may contact Simpro directly.

8.5 Agent claim handling procedure

1. Upon receiving notification of a fault, the Service Agent should attempt to determine the cause and a course of action before going to see the machine.
2. The Service Agent should contact Simpro for assistance in identifying the fault, if it is not apparent. This step is important, so that if a site visit is necessary, the correct tools and spare Parts can be taken. It is also important to establish whether there may have been any negligence, misuse or an accident that contributed to or caused the fault.
3. Parts requiring replacement will be supplied by Simpro free of charge; in some cases, it may be necessary to source Parts locally if needed urgently, but Simpro must authorize this if the cost of the item exceeds $50.00 and is to be charged to Simpro.
4. If the fault is not a Minor Fault, the Agent must notify Simpro and receive authorization to proceed before the repair work is done. Simpro will assist in every way possible, including discussing the problem directly with the End User if necessary, to determine the best method of effecting the repair in the shortest time possible.
5. Upon completion of the repair to an acceptable standard, the Agent shall complete the Application For Warranty Consideration Form and include copies of any invoices for labour, and any Parts supplied.
6. The cost of Warranty repairs is not to be deducted from any payments due to Simpro, unless Simpro issues a credit note clearly stating the amount and which invoice it relates to.
7. Simpro undertakes to be reasonable in respect of all Warranty repairs undertaken by Agents, but reserves the right to decline payment for:-
    a. Work done or materials replaced that were not authorized in advance by Simpro.
    b. Work not done to an acceptable standard.
    c. Work taking an unduly long time, due (in part or in full) to the lack of knowledge or skill of the serviceman or the Agent. The time allowed for repair work will be based on Simpro's assessment of what a reasonably skilled tradesman would take. Full Service Manuals are available on request at any time from Simpro and all service visits should be conducted with a Service Manual at hand.

This warranty shall be interpreted according to the laws of New Zealand and the parties agree to submit to the jurisdiction of the Courts of New Zealand.

Simpro has been supplying Smart Lifting solutions for over 30 years. Founded in 1986 as a light engineer, the company has since built a unique position in the supply chain for specialist materials-handling equipment - from bin lifters and crate stackers to Lithium-ion forklifts.

With business activities including design, manufacture, import, export, wholesale and retail, Simpro products now play a quiet role for thousands of companies around the world. Customers range from SMEs to bluechips, operating in sectors as diverse as warehouse logistics, food processing and waste management.

Simpro's OEM products are now sold around the world through a distribution network covering most large economies. The product range continues to evolve thanks to a policy of continuous R&D, new ideas and new partnerships.

Simpro is a family company, based in Auckland and registered with the New Zealand Companies Office as Simpro Handling Equipment Ltd (1827916).

66 Rangi Road
Takanini 2105
Auckland, New Zealand

PO Box 74
Takanini 2245
Auckland, New Zealand

+64 9 634 7445

sales@simpro.world

shop.simpro.world

@simpro.world

@SimproWorld_Lifters