LED Strobe Light and Alarm Sounder Combinations

QWCD35/ QWCD35SD
QWCD50/ QWCD50SD

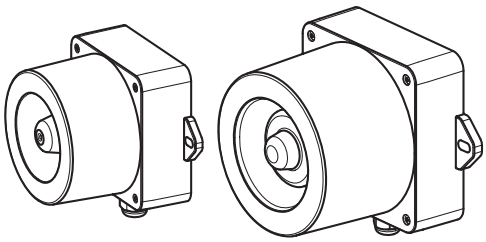

IP66 | -50~+60℃ | -20~+50℃ | HORN | 115dB | 123dB | SD mp3 | 113dB | 118dB | NPN | RoHS2

Thank you for purchasing Qlight's products. Please read this user manual carefully prior to installation and operation to ensure safe and correct use.

⚠ Precautions for Safety

Failure to follow the instructions below may cause a loss of life or serious physical injury.

1. During wiring or maintenance, please completely turn off the power of the product. (Failure to follow this may lead to an electric shock.)
2. Do not install the product in locations that subjects it to excessive dust or water other than the conditions designated by the IP protection ratings indicated for each product. (Failure to follow these instructions may cause a fire to the product, electric shock, physical injury, malfunction or damage to the product.)
3. Do not alter or repair this product. If maintenance or repair service is required, please contact your local Qlight contact point. (Failure to follow these instructions may lead to fire, electric shock, or product damage.)
4. Please apply the correct voltage to the product. (Failure to follow these instructions may lead to fire, electric shock, or product damage.)
5. When the product is applied to a condition that may impact lives or property, please make sure to have a double safety device. (Failure to follow this may cause damage to property, fire, electric shock and loss of life.)

⚠ Precautions for Correct Use

Failure to follow the proper instructions may cause damage to property, the product, or malfunction of the product that would void the warranty.

1. Please remove any objects that can interrupt ventilation around the product.
2. Please turn off the power of the product immediately if it fails to operate properly.
3. Carefully wire the product according to each product's specification.
4. Please be careful in preventing chemicals such as thinner, benzene, etc. in contact with the surface of the product.
5. Do not apply excessive force/impact to the product.
6. Failure to follow any of the instructions above may cause malfunction or damage to the product, fire, and electric shock.

Ordering Specification

QWCD35	-	110/220	-	R	-	LC
[Model number]		[Voltage]		[Color]		[Sound selection]
• QWCD35 • QWCD35SD • QWCD50 • QWCD50SD		• 12/24 - DC12-DC24V • 110/220 - AC110-220V		R-Red A-Amber G-Green B-Blue		• (Blank) - Standard type • LC Type -Uses external contact

Specifications

Model number	Voltage	Current	Sound pattern and volume	Certificates	Weight	Color
QWCD35 Built-in Sound Type	DC12V-24V	Max.1.300A	• Bit Input : 5Ch (SD card) • Binary Input : 31Ch • Warning Sounds : 115dB • MP3 Messages : 113dB	CE UL	1.10kg	R-Red A-Amber G-Green B-Blue
	AC110V-220V	Max.0.350A				
QWCD35SD MP3 Sound Type	DC12V-24V	Max.1.300A			1.15kg	
	AC110V-220V	Max.0.350A				
QWCD50 Built-in Sound Type	DC12V-24V	Max.4.680A	• Bit Input : 5Ch (SD card) • Binary Input : 31Ch • Warning Sounds : 123dB • MP3 Messages : 118dB		2.40kg	
	AC110V-220V	Max.0.770A				
QWCD50SD MP3 Sound Type	DC12V-24V	Max.4.680A			2.45kg	
	AC110V-220V	Max.0.770A				

※ CE compliant : DC12V/24V

※ UL Listed : DC24V

- **Protection rating** : IP66
- **Ambient operating temperature** : -50℃ - +60℃ (QWCD35, QWCD50)
  -20℃ - +50℃ (QWCD35SD, QWCD50SD)

Please scan the QR code for more detailed product information.

www.qlight.com

Dimensions

(Unit : mm)

QWCD35/ QWCD35SD

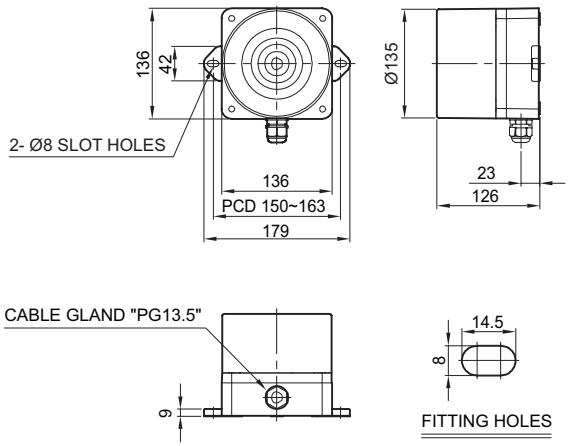

QWCD50/ QWCD50SD

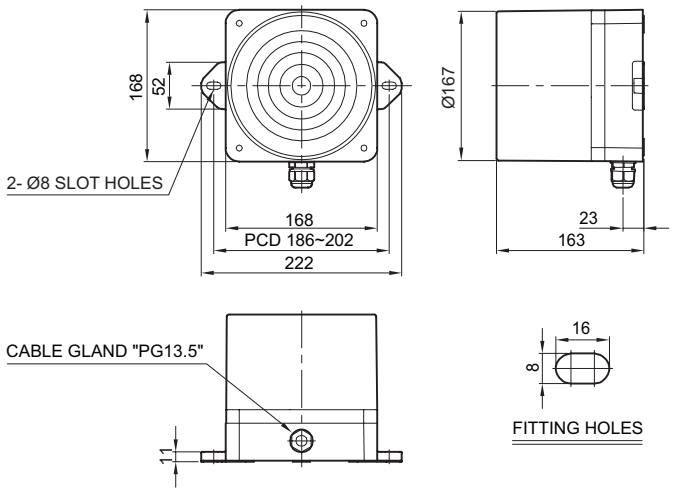

Sound Selection - Using Internal Switch (Built-in Sound Type)

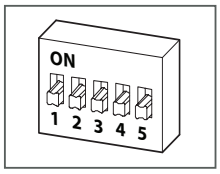

- For built-in sound type, use 'Sound Channel Selection Switch' located inside the product in order to select the type of sound. (For sound configuration chart, please refer to page 5 and 6)
- For standard type, once the unit is powered on, light and sound are working simultaneously.

Wiring Instructions for LC Type

- LC type product with exposed sound selection signal line is available upon request. Please refer to the diagram below for wiring.

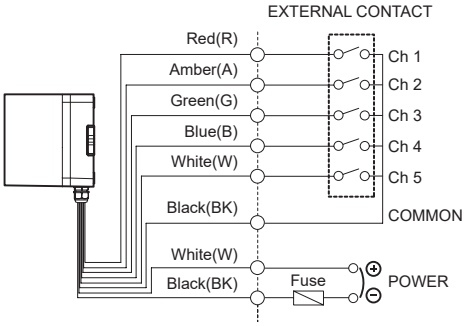

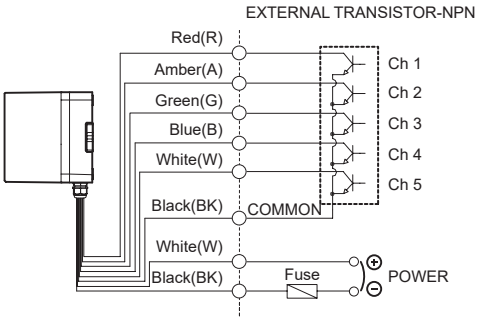

- External power line - UL1015 AWG18(0.75sq) x 2C 400mm
- External signal line - UL1007 AWG22(0.3sq) 400mm
- For DC type, the polarity of black line is negative(-).

* Caution
Supplying power to the common line or signal lines may cause malfunction of the product.

Bit/ Binary Input Method Depending on Wiring Method

■ Bit Input Mode

- Bit input mode(using external line) allows you to select one of five sound options by switching on one of the 5 channels. (Ch1 - Ch5)
- Total of 5 sound options are configurable.

■ Binary Input Mode

- Binary input mode(using external line) allows you to receive multiple inputs by using the 5 channels (Ch1 - Ch5) to configure one of 31 sound options.
- Total of 31 sound options are configurable.

※ The channel selection method using a transistor is the same as the external contact method, please refer to the figure on the right.

※ The switch figure to the right explains how to wire the external contacts of a signal line product. If the product is not a signal line product, use the channel selection switch attached inside the product.

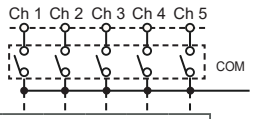

No.	1	2	3	4	5
0	0	0	0	0	0
1	1	0	0	0	0
2	0	1	0	0	0
3	0	0	1	0	0
4	0	0	0	1	0
5	0	0	0	0	1

Bit input mode
Can select up to 5 sound options

0	0	0	0	0	0
1	0	0	0	0	1
2	0	0	0	1	0
⋮					
29	1	1	1	0	1
30	1	1	1	1	0
31	1	1	1	1	1

Binary input mode
Can select up to 31 sound options

Parts Definition and Installation

QWCD35

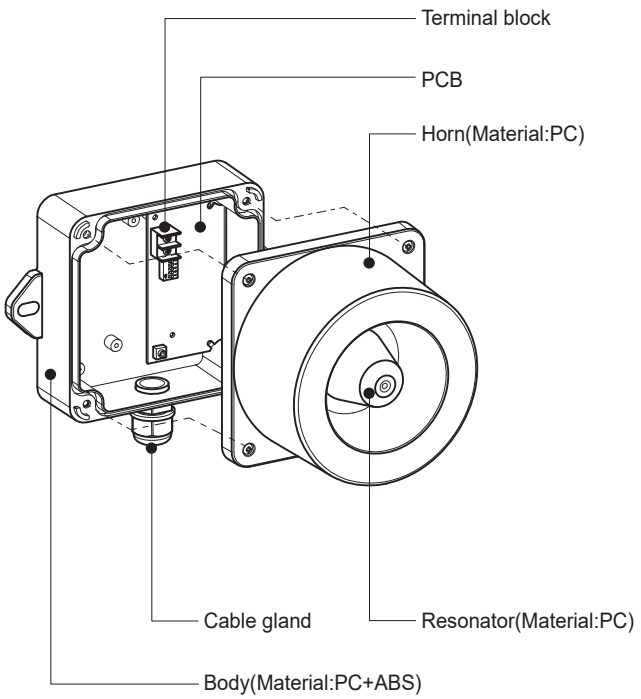

QWCD35SD

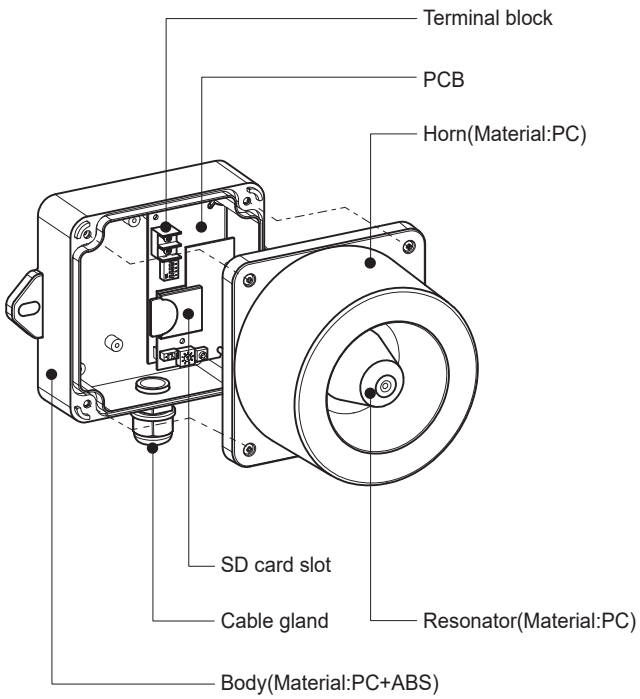

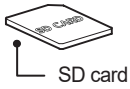

SD card

- SD cards are sold separately

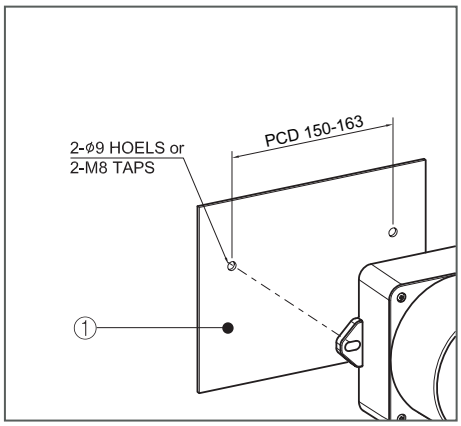

■ Installation

- First, make taps or holes that match the product mounting bolts locations on the mounting surface①.
- The mounting hole of this product is 9mm in diameter(long hole).
- If the tap is machined, fasten the bolt through the mounting hole of the product.
- When machining a hole, insert the bolt through the product, insert it into the hole, and tighten the nut from the opposite side of the mounting surface.
- Install a flat washer and a spring washer to the bolt if the product can experience severe vibration and shock.

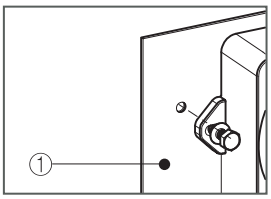

■ Tap Machining

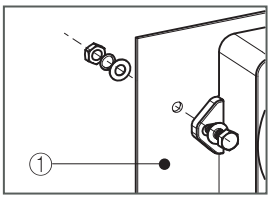

■ Hole Machining

Parts Definition and Installation

QWCD50

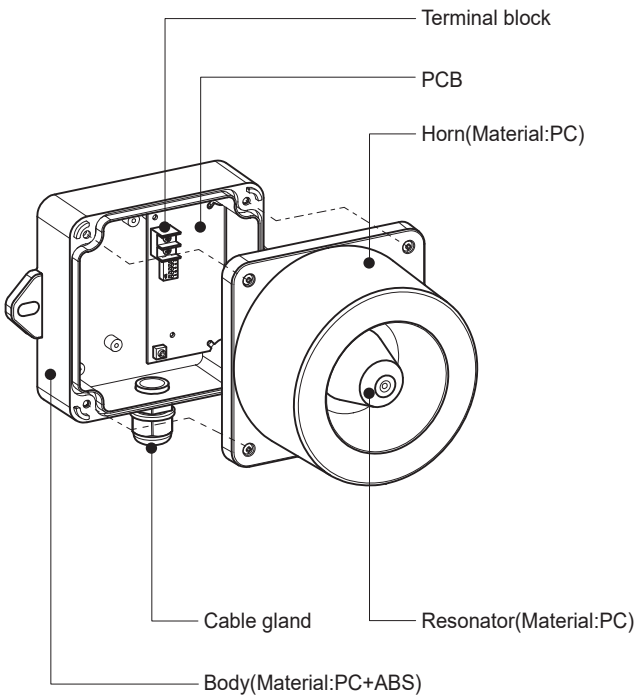

QWCD50SD

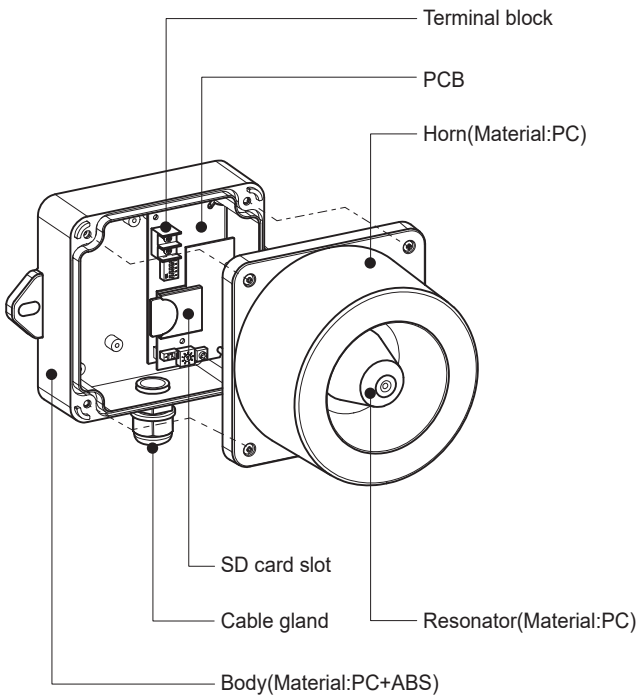

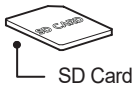

SD Card

- SD cards are sold separately

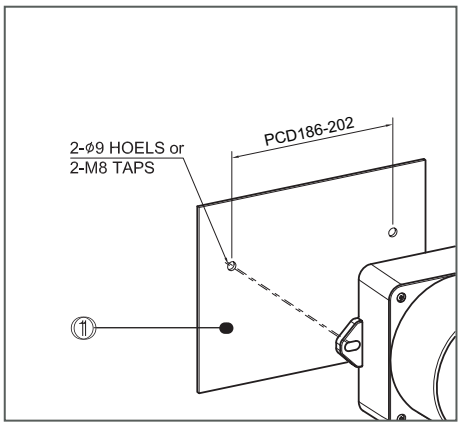

■ **Installation**

- First, make taps or holes that match the product mounting bolts locations on the mounting surface①.
- The mounting hole of this product is 9mm in diameter(long hole).
- If the tap is machined, fasten the bolt through the mounting hole of the product.
- When machining a hole, insert the bolt through the product, insert it into the hole, and tighten the nut from the opposite side of the mounting surface.
- Install a flat washer and a spring washer to the bolt if the product can experience severe vibration and shock.

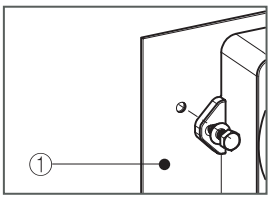

■ Tap Machining

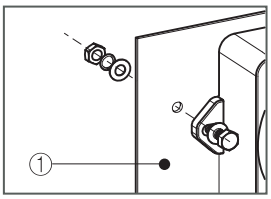

■ Hole Machining

Installation Environment and Degree of Protection

- This product is designed for indoor and outdoor use with protection rating of IP66.
- If the product is installed in locations that subject it to excessive dust or water other than the designated IP protection ratings indicated(IP66), it may cause malfunction or damage to the product.
- After installing the cable, tighten the cable entry as same level of protection rating of the product and seal it so that dust and moisture can not penetrate into the product.
- For further information, please visit our website (www.qlight.com).

Operation Parts Configuration

■ QWCD35/ QWCD50(Built-in Sound Type)

QWCD35

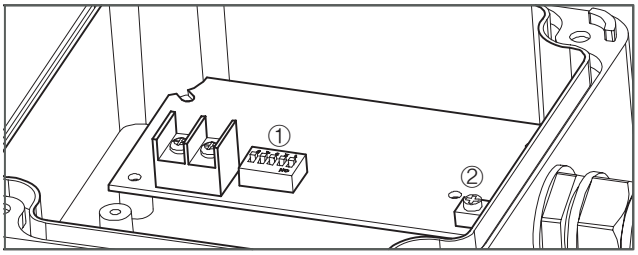

QWCD50

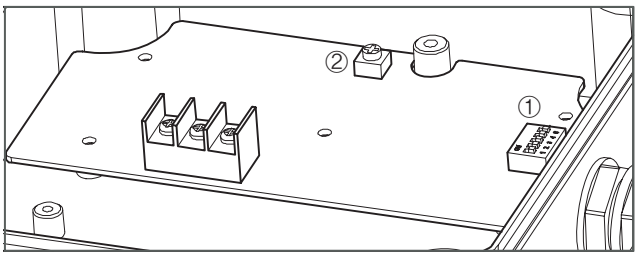

• Built-in sound type product supports binary input 31 channels.

① Sound channel selection switch
(For more information, please refer to Page 5, “Types and Combinations of sounds.”)

② Volume dial
(For more information, please refer to Page 6, “Volume Adjustment”.)

■ QWCD35SD/ QWCD50SD(SD Card Type-MP3)

QWCD35SD

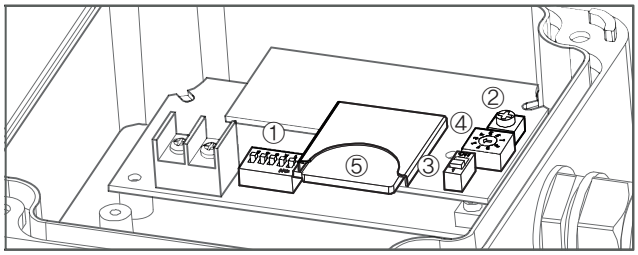

QWCD50SD

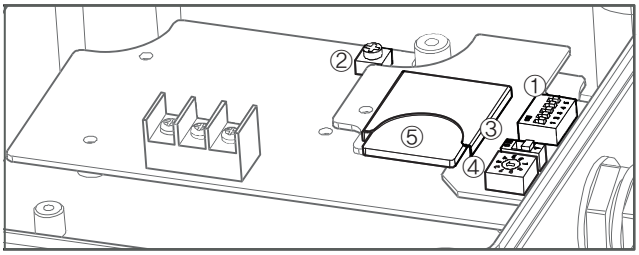

① Sound channel selection switch
(For more information, please refer to Page 5, “Types and Combinations of Sounds.”)

② Volume dial
(For more information, please refer to Page 6, “Volume Adjustment”.)

③ Sound setting switch
(For more information, please refer to Page 6, “Selecting the Built-in Sound and External Sound (SD Card)”.)

④ Play mode setting switch
(For more information, please refer to Page 7, “Play Mode Setting”.)

⑤ SD card slot
(For more information, please refer to Page 7, “Selecting an SD Card and Saving Sound Files”.)

Sound Type and Combination Manual

■ Binary Input - Playing Built-in Sound

• When playing the built-in sound, select the sound in binary input mode.
• In binary input mode, you can choose one sound from 31 sounds by configuring the 5 channels.
• Available in QWCD35/ QWCD50/ QWCD35SD/ QWCD50SD models.

Binary input method sound configuration						
ON(1) OFF(0)	Ch1	Ch2	Ch3	Ch4	Ch5	Type of sound
No.	1	2	3	4	5	
0	0	0	0	0	0	No sound
1	0	0	0	0	1	Rel rel rel
2	0	0	0	1	0	Slow Ambulance PI-PO
3	0	0	0	1	1	Oit Oit warning sound
4	0	0	1	0	0	Emergency WA-U(Yelp)
5	0	0	1	0	1	Pi- buzzer
6	0	0	1	1	0	7 Short PI. / 1 Long
7	0	0	1	1	1	Pi o Pi o
8	0	1	0	0	0	Phone Ring
9	0	1	0	0	1	Pi- buzzer
10	0	1	0	1	0	Pi pi pi short
11	0	1	0	1	1	Di o Di o 2 tones buzzer
12	0	1	1	0	0	Oit Oit warning sound
13	0	1	1	0	1	Slow Ambulance PI-PO
14	0	1	1	1	0	Slow Di o Di o
15	0	1	1	1	1	Fast Li o li o
16	1	0	0	0	0	Fire.A-ANG
17	1	0	0	0	1	Fast Ambulance PI-PO
18	1	0	0	1	0	Slow Ambulance PI-PO
19	1	0	0	1	1	Ri ro ri ro warning sound
20	1	0	1	0	0	Repeat Di-o 3 times
21	1	0	1	0	1	Fire.A-ANG
22	1	0	1	1	0	Ambulance PI-PO
23	1	0	1	1	1	Slow Fire.A-ANG
24	1	1	0	0	0	Pi-pi- buzzer low frequency
25	1	1	0	0	1	Pi-pi- buzzer high frequency
26	1	1	0	1	0	Di-di- buzzer high frequency
27	1	1	0	1	1	Di-di- buzzer low frequency
28	1	1	1	0	0	Rising Po-ong
29	1	1	1	0	1	Fast Ambulance PI-PO
30	1	1	1	1	0	Rising frequency
31	1	1	1	1	1	Repeat A-ANG

■ Bit Input - Playing External Sound (SD Card)

• User can save sounds(MP3) to the SD card and able to select 1 sound from 5 saved sounds.
• User can save 5 sounds.
• Available in QWCD35SD/ QWCD50SD models.

Bit input method sound source configuration						
ON(1) OFF(0)	Ch1	Ch2	Ch3	Ch4	Ch5	Type of sound
No.	1	2	3	4	5	
0	0	0	0	0	0	No sound
1	1	0	0	0	0	Custom sound 1(01_xxx.mp3)
2	0	1	0	0	0	Custom sound2(02_xxx.mp3)
3	0	0	1	0	0	Custom sound3(03_xxx.mp3)
4	0	0	0	1	0	Custom sound4(04_xxx.mp3)
5	0	0	0	0	1	Custom sound5(05_xxx.mp3)

■ **Binary Input - Playing External Sound (SD Card)**

- The user can save sounds(MP3) to the SD card and able to select the sound in binary input mode.
- Binary input mode chooses one of the 31 sounds by combining the on/ off switch of the 5 different channels to the associated tone.
- Available on QWCD35SD/ QWCD50SDmodels.

Binary Input Method Sound source configuration						
ON(1) OFF(0)	Ch1	Ch2	Ch3	Ch4	Ch5	Type of sound
No.	1	2	3	4	5	
0	0	0	0	0	0	No sound
1	0	0	0	0	1	Custom sound1(01_xxx.mp3)
2	0	0	0	1	0	Custom sound2(02_xxx.mp3)
3	0	0	0	1	1	Custom sound3(03_xxx.mp3)
4	0	0	1	0	0	Custom sound4(04_xxx.mp3)
5	0	0	1	0	1	Custom sound5(05_xxx.mp3)
6	0	0	1	1	0	Custom sound6(06_xxx.mp3)
7	0	0	1	1	1	Custom sound7(07_xxx.mp3)
8	0	1	0	0	0	Custom sound8(08_xxx.mp3)
9	0	1	0	0	1	Custom sound9(09_xxx.mp3)
10	0	1	0	1	0	Custom sound10(10_xxx.mp3)
11	0	1	0	1	1	Custom sound11(11_xxx.mp3)
12	0	1	1	0	0	Custom sound12(12_xxx.mp3)
13	0	1	1	0	1	Custom sound13(13_xxx.mp3)
14	0	1	1	1	0	Custom sound14(14_xxx.mp3)
15	0	1	1	1	1	Custom sound15(15_xxx.mp3)
16	1	0	0	0	0	Custom sound16(16_xxx.mp3)
17	1	0	0	0	1	Custom sound17(17_xxx.mp3)
18	1	0	0	1	0	Custom sound18(18_xxx.mp3)
19	1	0	0	1	1	Custom sound19(19_xxx.mp3)
20	1	0	1	0	0	Custom sound20(20_xxx.mp3)
21	1	0	1	0	1	Custom sound21(21_xxx.mp3)
22	1	0	1	1	0	Custom sound22(22_xxx.mp3)
23	1	0	1	1	1	Custom sound23(23_xxx.mp3)
24	1	1	0	0	0	Custom sound24(24_xxx.mp3)
25	1	1	0	0	1	Custom sound25(25_xxx.mp3)
26	1	1	0	1	0	Custom sound26(26_xxx.mp3)
27	1	1	0	1	1	Custom sound27(27_xxx.mp3)
28	1	1	1	0	0	Custom sound28(28_xxx.mp3)
29	1	1	1	0	1	Custom sound29(29_xxx.mp3)
30	1	1	1	1	0	Custom sound30(30_xxx.mp3)
31	1	1	1	1	1	Custom sound31(31_xxx.mp3)

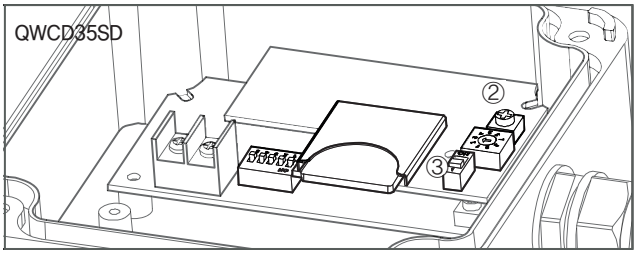

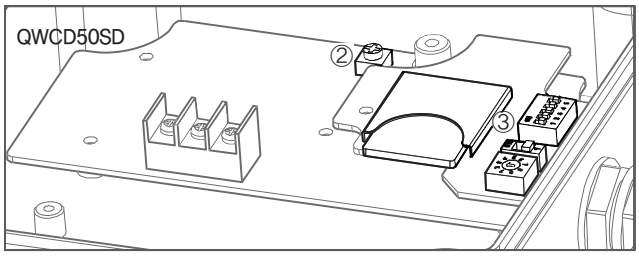

Volume Adjustment

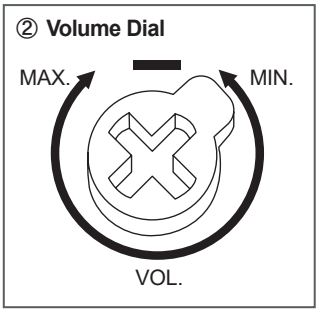

- The volume output of this product is adjustable.
- Turn the volume dial clockwise to increase the volume, and turn counter clockwise to decrease the volume.
- There will be no sound when the dial is put at MIN.

Selection between Built-in Sound and External Sound (SD Card Type)

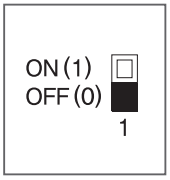

- To play built-in sounds, set the sound setting switch to the OFF (0) position.
- To play an external sound on the SD card, insert the SD card into SD card slot and set the sound setting switch to ON (1).

Play Mode Setting

- Can select between channel input methods (bit/ binary) and various playback modes.
- Use a (-) flat screwdriver to rotate one space at a time (regardless of the direction of rotation).
- Switch 0 and 9 have no function.

Play mode switch

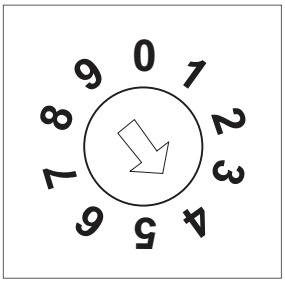

Can rotate regardless of direction

※ setting withdrawal in 3 is SD

PLAY MODE		
1	Bit Input Mode	• Play back one of the 5 built-in or external sounds once • For a built-in sound, the playback time is about 10 seconds
2	Binary Input Mode	• Play back one of the 31 built-in or external sounds once • For a built-in sound, the playback time is about 10 seconds
3	Bit Input Hold Playback Mode	• Play back one of the 5 built-in or external sounds continuously
4	Binary Input Hold Playback Mode	• Play back one of the 31 built-in or external sounds continuously
5	Bit Input Sound Reduction Mode	• Decrease the volume of the selected channel by 15dB • Play back one of the 5 built-in or external sounds continuously
6	Binary Input Sound Reduction Mode	• Decrease the volume of the selected channel by 15dB • Play back one of the 31 built-in or external sounds continuously
7	Bit Input Sequence Memory Playback Mode	• When other channel signals are continuously inputted within 3 seconds after inputting the channel, the input order is memorized and playback in the memorized order (playback time is 3 - 5 seconds) • The last input channel is played continuously (Bit input only)
8	Test Mode	• In the test mode, the Ch1 of the built-in sound or the external sound is automatically played continuously • Switch back to another mode to exit test mode

SD Card Specifications and Sound Saving Manual

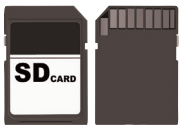

- SD card specifications
- Use standard SD card.
- Mini SD or Micro SD also can be used with adaptor.
- SD, SDHC type supported
- Storage capacity : Max. 32GB
- Class : No specification
- Please save the MP3 sound file on the SD card as shown below.
- Create an “MP3_FILE” folder on the SD card and save the MP3 file in the following file format.
- MP3 file format

23	_	For Elise	.mp3

- For Elise: Filename (Up to 40 characters)
- _: Separator (Track# and file title)
- 23: Track# (01-31)

- When saving files, please save them in order.
- Please start saving after formatting the SD card.
- The length of the file name must not exceed 40 characters.

[Example]
- 01_Fire.mp3
- 02_Emergency.mp3
- 03_For Elise.mp3
- ⋮
- 31_Cuckoo's Waltz.mp3

Wiring Instruction for Terminal Block

■ QWCD35(Built-in Sound Type)/ QWCD35SD(SD Card Type)

QWCD35-DC type

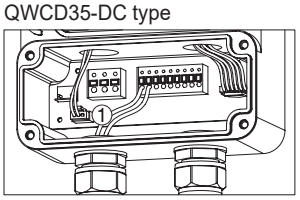

QWCD35-AC type

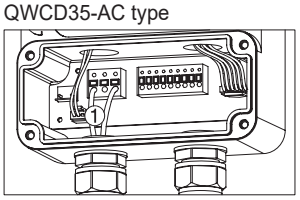

■ QWCD50(Built-in Sound Type)/ QWCD50SD(SD Card Type)

QWCD50-DC type

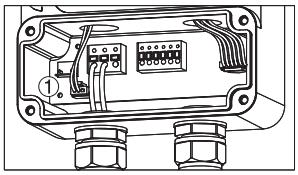

QWCD50-AC type

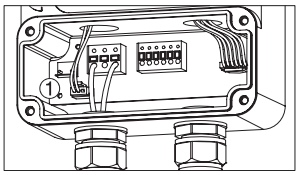

- Please wire up the power line into terminal ①.
- Please use ‘O’ type or ‘U’ type wire terminal for safe wiring.
- AC type : Can be wired regardless of polarity.
- DC type : Please refer to above figure and carefully follow the wiring instructions.

Operation Method and Setting

Model number	Built-in sound	When playing a built-in sound	When playing an external sound (SD Card)	
		Binary input	Bit input	Binary input
QWCD35 QWCD50	31 types of sounds	Play one of 31 special warning sounds	-	-
QWCD35SD QWCD50SD	31 types of sounds	Play one of 31 special warning sounds	Play one of the 5 user-recorded sounds	Play one of the 31 user-recorded sounds

1. QWCD35/ QWCD50

■ When Using a Built-in Sound in Binary Input Mode

- Use 'Channel Selection Switch' to select one of the 31 built in sounds.
- For more information, see page 5 'Sound Selection' section.
- For LC type product, refer to page2 'Bit/ Binary Input Method According to Wiring Method' section for detailed manual of channel selection method.

2. QWCD35SD/ QWCD50SD

■ When Using a Built-in Sound in Binary Input Mode

※ Sound switch setting → Play mode switch setting → Channel selection

1. Set the sound setting switch to OFF to select the built-in sound.
   - For more information, please refer to page 6 'Selecting between Built-in Sound and External Sound'.
2. Select one of 4 modes(2, 4, 6, or 8) by using play mode setting switch.
   - Mode 8 is a test mode and the sound of channel 1 is continuously played. (In this case, channel selection is disabled.)
   - For more information, please refer to page7, 'Play Mode Setting'.
3. Use the channel selection switch to select one of t he 31 built in sound.
   - For more information, please refer to page5, 'Binary Input - Use Built-in Sound Source'.
   - For Extracted sound selection signal line type(LC) product, refer to page2 'Bit/ Binary Input Method According to Wiring Method' for details of channel selection method.

■ When Using an External Sound Source (SD Card) in Bit Input Mode

※ Insert SD card → Sound switch setting → Play mode switch setting → Channel selection

1. Please refer to page 7 'SD Card Specifications and Sound Saving Manual' to see how to save sound files.
   - Supports up to 5 user-defined sounds.
2. Insert the SD card into the SD card slot.
3. Set the No. 1 switch of the sound switch to ON to select external sound.
   - For more information, please refer to page 6 'Selection between Built-in Sound and External Sound (SD Card Type)'
4. Use the Play mode setting switch to select 1, 3, 5, 7 or 8 mode.
   - Mode 8 is a test mode which continuously plays channel 1. (In this case, channel selection is disabled.)
   - For more information, refer to page7, 'Play Mode Setting'.
5. To select a channel, use the terminal block in the back side of the product to select one of the 5 user-defined sounds.
   - For more information, please refer to page 5 'Bit Input - Use External Sound (SD Card)'
   - For external signal line type (LC) products, please refer to page 2 'Bit/ Binary Input Method Depending on Wiring Method'.

■ When Using an External Sound Source (SD Card) Source in Binary Input Mode

※ Insert SD card → Sound switch setting → Play mode switch setting → Channel selection

1. Please refer to page 7 'SD Card Specifications and Sound Saving Manual' to see how to save sound files.
   - Supports up to 5 user-defined sounds.
2. Insert the SD card into the SD card slot.
3. Set the No. 1 switch of the sound setting switch to ON to select external sound.
4. Use the play mode setting switch to select 1, 3, 5, 7 or 8 mode.
   - Mode 8 is a test mode which continuously plays channel 1. (In this case, channel selection is disabled.)
   - For more information, refer to page7 'Play Mode Setting'.
5. Use the sound select switch to select the one of the 31 user-defined sounds.
   - For more information, please refer to page 6 'Binary Input - Playing External Sound (SD Card)'.
   - For external signal line type (LC) products, please refer to page 2 'Bit/ Binary Input Method Depending on Wiring Method'.

Technical Certification

• Qlight products are designed to meet strict quality and technical standards. Thus, the Qlight brand is widely recognized for its high quality and technical innovations from leading institutions around the world.

ISO International Organization for Standardization

Qlight quality assurance systems have been certified by ISO by applying the ISO 9001:2008, KS Q ISO 9001:2009 regulation.

IECEx International Explosion Proof Certification (IECEx)

Certified that Qlight's products are being manufactured and manage according to international standards.

ATEX The European Regulatory Framework or Manufacture, Installation and Use of Equipment in Explosive Atmospheres

Qlight's explosion proof products comply with ATEX Directives 94/9/EC.

NEPSI National Supervision and Inspection Center for Explosion Protection and Safety of Instrumentation

Qlight's design and manufacturing system meets the People's Republic of China National explosion proof Standard.
(Chinese Standard-GB3836/GB12476)

KCs Explosion Proof Device Safety Certification System

The safety performance of machines and equipment subject to safety certification and Technical capability and production system have been certified safety certification standards.

TIIS Japan Explosion-proof Certification

TIIS is a Japanes explosion proof test and certification system accordance with the Ministry of Health, Labour and Welfare Notice and the explosion proof guidelines for factory electrical equipment. Qlight's explosion proof products hasve been tested and certified by TIIS.

CCS China Classification Society

Qlight's design and quality assurance system has been certified by the China Classification Society.

RMRS Russian Maritime Register of Shipping

Qlight's design and quality assurance system has been certified from Russian Maritime Register of Shipping.

LR Lloyd's Register

Qlight's design and quality assurance system has been certified from Lloyd's Register.

KR Korean Register of Shipping

Qlight's design and quality assurance system has been certified by the Korean Register of Shipping.

KC Korea Safety Certification

Qlight's products are certified by KC for preventing accident caused by fire.

E-mark Commission Directive Regarding Vehicle Industry

Qlight has obtained EU mark for approved vehicles and vehicle components sold into the EU(EEA : European Economic Area)

ICAO International Civil Aviation Organization

Qlight guarantees our products satisfy the criteria regulated by the International Civil Aviation Organization(ICAO, FAA).

KCC Conformity Assessment of Broadcasting Communication Equipment

Qlight has been certified to protect the electromagnetic environment that causes unwanted electromagnetic waves from the device, communication failure due to other devices or external radio waves, and malfunction of the device.

UL Underwriters Laboratories

Qlight's design and quality assurance system has been certified from UL to ensure the stability of consumption goods and to protect consumers.

CCCF China Certification Center for Security & Protection

Qlight has passed the rigorous examination process of "Passing Fire Protection Products Centering" In order to sell fire-fighting products such as fire alarm equipment to Chinese market.

CCC China Compulsory Certificate

Qlight's has obtained CCC which guarantees safety, protection against fraud, environment, etc.

CE European Commission

Qlight has been certified by the European Commission.

RoHS2 Restriction of Hazardous Substances Directive

Qlight c omplies with the Restriction of Hazardous Substances Directive by limiting its use of hazardous materials.

MEMO

MEMO

⚠ For your safety

Specification and dimensions listed in this catalogue subject to change without notice for product quality improvement.
The newest product information is available on our website.(www.qlight.com)
Please read the instruction manual attached to the product carefully before installation and use.

Qlight Co., Ltd. *www.qlight.com* | *trade@qlight.com*
Head Office | Suite #1510, STX-V Tower, 128 Gasan digital 1-ro, Geumcheon-gu, Seoul, Korea
Tel. +82-2-2679-6152(Toll free. +82-80-328-2222) Fax. +82-2-2679-6154
Factory | 185-25, Mukbang-ro, Sangdong-myeon, Gimhae-si, Gyeongsangnamdo, Korea Tel. +82-55-328-1111(Toll free. +82-80-328-1111)
Qlight OverSEAs Sales Dept | 704 Nakdong-daero, Sasang-gu, Busan, Korea(Eomgung-Dong) Tel : +82-51-620-4100
Qlight Public Relations & Marketing Team Office | 704 Nakdong-daero, Sasang-gu, Busan, Korea(Eomgung-Dong) Tel. +82-51-245-0017

Qlight USA, Inc. *www.qlight.com* *www.qlightusa.com* | *sales@qlightusa.com*
3003 North First Street, Suite #341, San Jose, CA 95134 USA Tel. +1-408-519-5740 Fax. +1-408-519-5739

SHANGHAI Qlight Electronic Co., Ltd. *www.qlight.com* *www.qlightcn.com* | *qlightcn@qlight.com*
China Factory/ Shanghai Sales Office | #19, Nanda Road, Baoshan Area, Shanghai, China Tel. +86-21-6651-7100 Fax. +86-21-6315-3929
China Factory Site 2 (Qidong) | #33, Haiyan Road, Qidong High-tech Industrial Development Zone, Qidong, Jiangsu Province, China
Tel +86-513-8384-9999 Fax +86-513-8384-9910

Qlightec
Innovation in Alarm & Signal

Product Operation Inquiry / Customer Support +82-51-620-4100
You can expect prompt service if you have exact information such as model name, symptom, telephone number and address.
※ALL PRODUCT, PRODUCT SPECIFICATIONS AND DATA ARE SUBJECT TO CHANGE WITHOUT NOTICE TO IMPROVE RELIABILITY, FUNCTION OR DESIGN OR OTHERWISE.
Head office : Suite #1510, STX-V Tower, 128 Gasan digital 1-ro, Geumcheon-gu, Seoul, Korea (Postal Code : 08507)
Factory : 185-25, Mukbang-Ro, Sangdong-Myeon, Gimhae-Si, Gyeongsangnam-Do, Korea (Postal Code : 50805)
www.qlight.com

EN - QWCD35 - 2106A