A new concept of using the horn cover as a light globe

QWCD series is a patented product with an integrated horn and light globe. (Patent registration : 10-1452447 horn having a light emitting part)

QWCD series	
QWCD35	Built-in standard sound
QWCD35SD	MP3(SDcard)
QWCD50	Built-in standard sound, large output sound
QWCD50SD	SDcard(MP3). Large output sound

- By using the horn cover as a light globe, the size of the product has been reduced significantly
- The color of light can be selected from red, yellow, green, or blue
- Product has two models : the basic model with 31 built-in sounds, and an external sound (MP3) type model
- Includes seven different playback functions; one function is the continuous playback function which provides constant message notification
- There are 31 built-in sounds that can be played in various environments, and supports a Binary input method
- You can save and play up to 31 mp3 files using a external SDcard
- Can easily set up the sounds using a PC
- By making the horn cover with polycarbonate (PC) material, The product has excellent durability and weather resistance
- Can be used for heavy-duty, ship, or outdoor use which requires waterproof, dustproof structure (IP66)

Built-in sound type

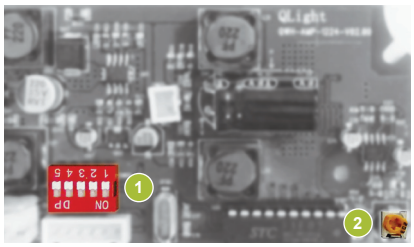

1. Sound selection switch
2. Volume

The input method of built-in sound type

No.	1	2	3	4	5
0	0	0	0	0	0
1	0	0	0	0	1
2	0	0	0	1	0
:	:	:	:	:	:
31	1	1	1	1	1

Built-in sound type model supports Binary input mode which provides a selection of 31 different input combinations for five kinds of sounds.

You can only select 2 numbers with 1 switch; "0", "1". With 5 switches you can have 31 combinations. Selecting one sound from 5 switches is the Binary input method.

SDcard(MP3) type

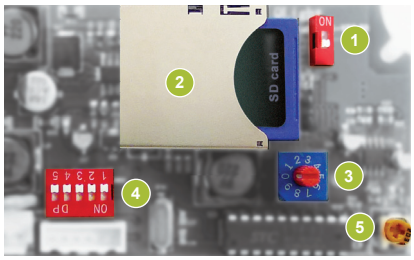

1. Sound setting switch
2. MP3 playable SDcard
3. Play mode setting switch
4. Sound select switch
5. Volume

The sound selection method of SDcard type

Can easily select built-in sound or external sound(MP3) by using the sound selection switch.

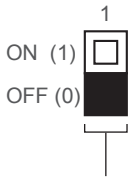

The sound selection

0 : Select built-in sound

1 : Select SDcard

- 31 built-in special warning sounds
- Supports SDcard (MP3)
- Binary Input : 31Ch
- Bit Input : 5Ch (SDcard only)
- A multifunctional product that can play MP3 files using an SDcard
- Please refer to page 24 for detailed settings
- Built-in sound is set to #1 as default

QWCD series

LED Strobe Signal Light and Electric Horn Combinations

IP66 | -30~+50°C | HORN 115dB | SD mp3 113dB | NPN | RoHS

- **Qlight's exclusive innovative design - the horn cover emits light!**
- **Combination of 31 sound options built in and SD Card(MP3) option**

QWCD35 series

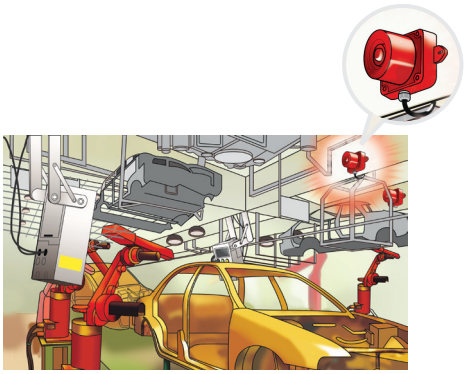

QWCD35 model applied in an automobile production plant environment.

Common Specifications(QWCD35/ QWCD35SD/ QWCD50/ QWCD50SD)

- Easy device customization with built in sound selection function, volume adjustment function and an SDcard slot for user inputted tones
- 31 available tones that can be selected for a variety of environments
- The user can select their own tones by inputting the MP3 file directly into the SDcard
- 31 pre-recorded tones available via binary input
- Suitable for use in environments that require a tight seal and superior dust protection rated IP66
- Flashing rate : 60-80 flashes/min(steady/flashing mode selection available in built in switch)
- Materials : Horn-PC, Body-ABS
- Ambient operating temperature : -30°C to +50°C
- Protection Rating : IP66
- Certificates : CE Compliant, UL Listed
- Compliant with RoHS directive

QWCD35 LED Strobe Signal Light and Electric Horn Combination

Model number	Voltage	Current	Sound Pattern and Volume	Certificates	Weight	Color
QWCD35 Built-in standard sound	DC12V-24V	Max 1.025A	• Bit Input : 5Ch (SDcard) • Binary Input : 31Ch • Warning Sounds: 115dB • MP3 Messages : 113dB	CE DC Only	1.10kg	• R-Red • A-Amber • G-Green • B-Blue
QWCD35SD MP3	AC110V-220V	Max 0.360A		UL DC Only	1.15kg	

※ DC type model has a free-voltage range of 10V-30V.
※ AC type model has a free-voltage range of 100V-240V.

Technical Diagram

(Units : mm)

QWCD35

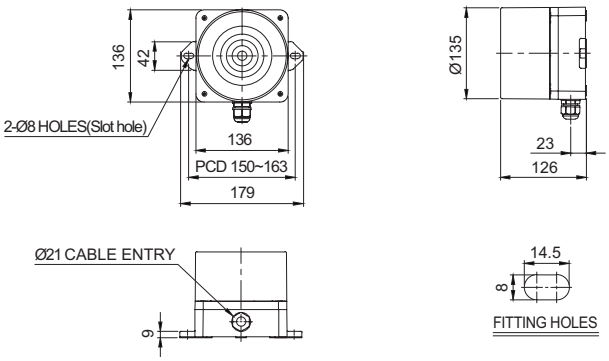

Customization

- External signal line available for users to connect their own sound input (Model number : -LC)

Ordering Specification

QWCD35	-	110/220	-	R	-	LC
[Model number]		[Voltage]		[Color]		[sound selection]
• QWCD35 • QWCD35SD		• 12/24 -DC12V-24V • 110/220 -AC110V-220V		• R-Red • A-Amber • G-Green • B-Blue		• Standard -Built-in switch • LC -External contact

QWCD series

LED Strobe Signal Light and Electric Horn Combinations

IP66 | -30~+50°C | HORN 123dB | SD mp3 118dB | NPN | RoHS

- **Qlight's exclusive innovative design - the horn cover emits light!**
- **Combination of 31 sound options built in and SD Card(MP3) option**

QWCD50 series

QWCD50 LED Strobe Light and Electric Horn Combination

Model number	Voltage	Current	Sound Pattern and Volume	Certificates	Weight	Color
QWCD50 Built-in standard sound	DC12V	2.025A	• Bit Input : 5Ch (SDcard) • Binary Input : 31Ch • Warning Sounds: 123dB • MP3 Messages : 118dB	CE DC Only	2.40kg	• R-Red • A-Amber • G-Green • B-Blue
	DC24V	1.150A		UL DC Only	2.40kg	
QWCD50SD MP3	AC110V-220V	Max 0.600A			2.45kg	

※ AC type model has a free-voltage range of 100V-240V.

Technical Diagram

(Units : mm)

QWCD50

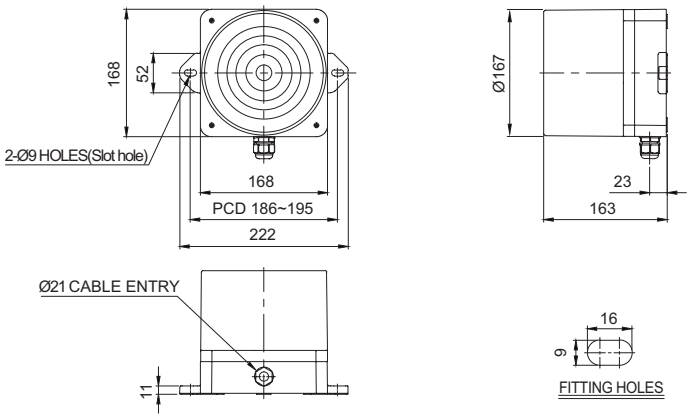

Wiring Instructions

- Standard specification : Use internal switches
- Customization : Use external contact

QWCD-DC/AC

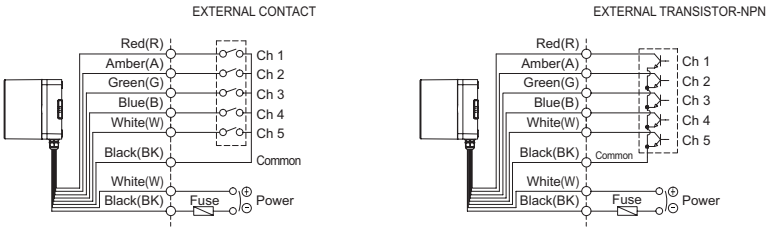

- Wiring to external contact and transistor
- Wiring to transistor, use the NPN transistor
- Power line standard UL1015 AWG18(0.75sq)×2C 400mm
- Signal line standard UL1007 AWG22(0.3sq) 400mm
- DC type : Black output line is negative(-)
- Channel selection : Bit input, 5 sound tones for each group
- Binary input 30 sound tones output

* Please refer to Page 24 for set of channel input.
(If wiring is changed by channel selection switch)

Customization

- External sound selection line(Model number : -LC)

Ordering Specification

QWCD50	-	110/220	-	R	-	LC
[Model number]		[Voltage]		[Color]		[sound selection]
• QWCD50 • QWCD50SD		• 12-DC12V • 24-DC24V • 110/220 -AC110V-220V		• R-Red • A-Amber • G-Green • B-Blue		• Standard -Built-in switch • LC -External contact