MH HOIST CYLINDER 5 STAGE

P/N: 325508

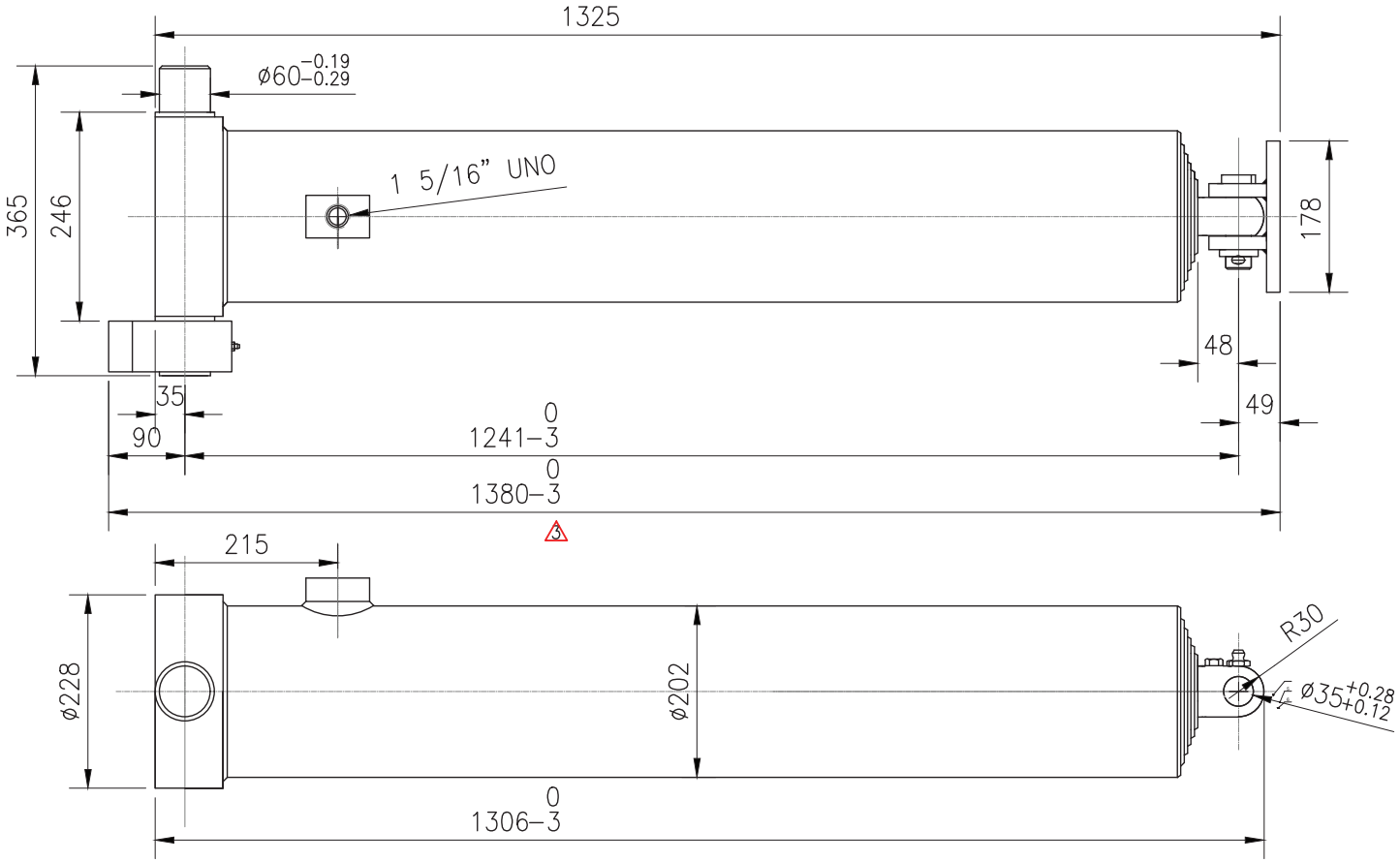

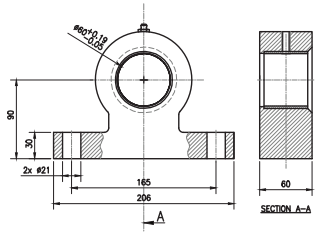

Bottom Mount Foot(165-90-60)
PN. 321120
DWG: C-Hom005
Material: M/S(235MPa)

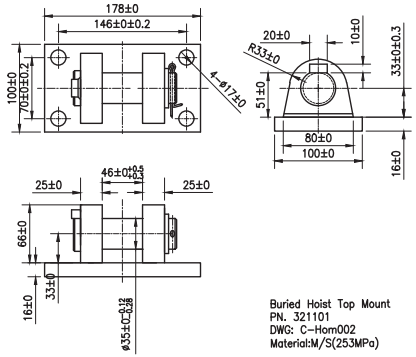

Buried Hoist Top Mount
PN. 321101
DWG: C-Hom002
Material:M/S(253MPa)

Technical Data:

1) Each Stage Diameter(mm): ø175/ø152/ø130/ø110/ø90
2) Rated Pressure 2900PSI, Test Pressure 3625PSI.
3) Thrust at all Levels (KN): 465/353/261/190/144.
4) Manufactured In Accordance With : QC/T460-2010
5) After Final Test Of Cylinder, Apply An All Weather Surface Primer & Then Red Paint Finish. Surface Should Have Uniform Spray Finish, No Bubbles, Paint Run Or Any Other Phenomena.
6) Caps & Bungs To Be Fitted To Tunnion & Parts.

This drawing is not to be used by any third party, unless approval is obtained in writing from MODERN TRANSPORT ENGINEERS LTD.

HOIST CYLINDER 5 STAGE
(4899MM STROKE)

THIRD ANGLE PROJECTION

All dims are in mm Remove burrs & sharp edges ±0.15 tolerence for dims with decimal