# PARLOK BLACK 19.5” 1/4 GUARD

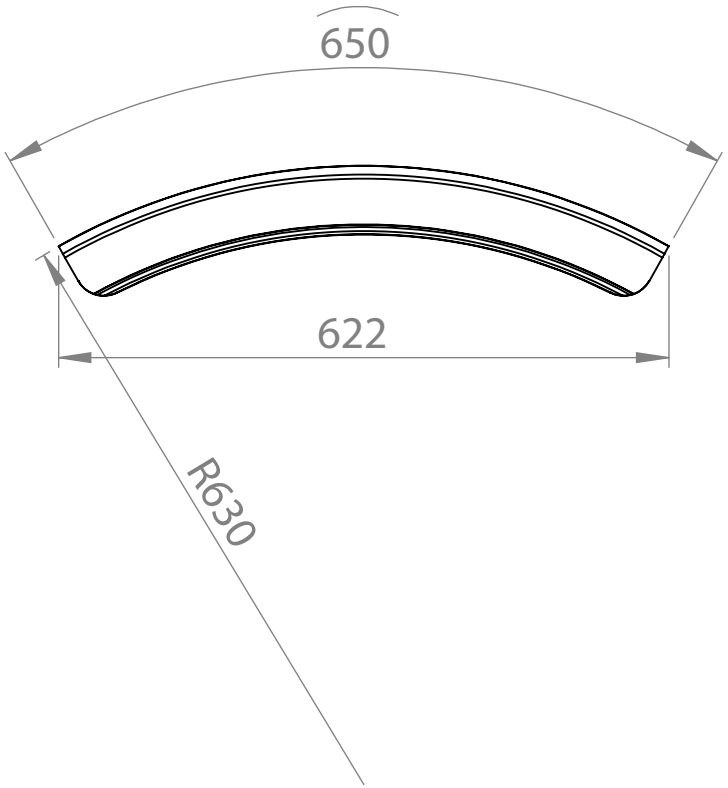


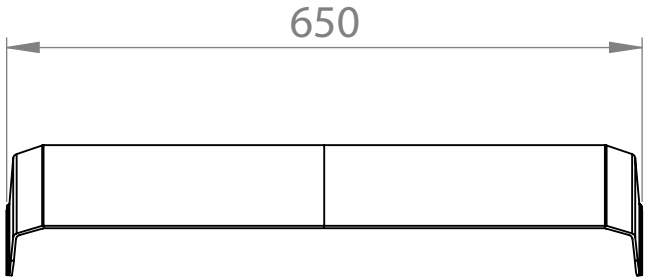

| | |
|---|---|
| PN: | 105279 |
| Drawing Number: | 101017 |
| Size: | 650x650 R630 |
| Material: | PE=HD |
| Weight: | 1.4kg |

105279
www.mtw.co.nz