Installation Instructions

Suits 35mm to 45mm Door Thickness

GAINSBOROUGH freestyle

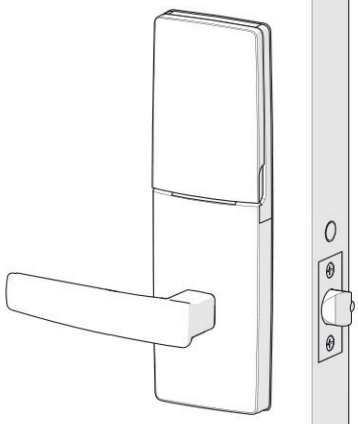

External View

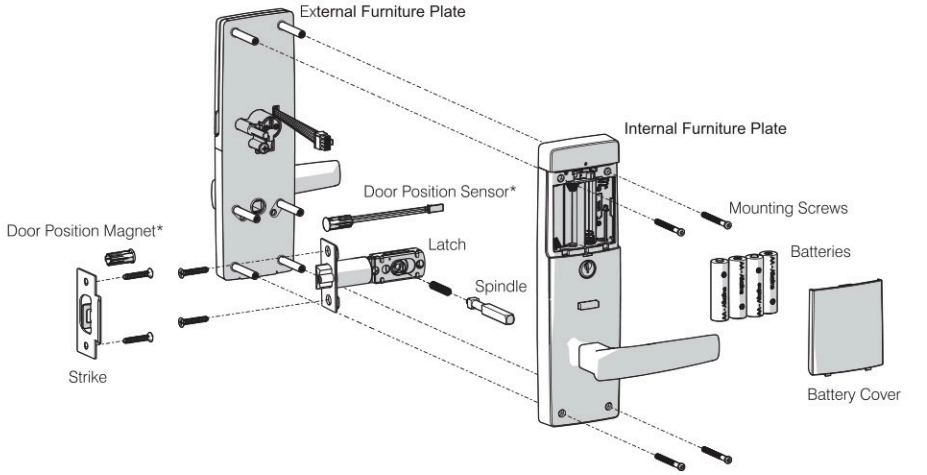

Exploded View

* Door Position Sensor and Magnet sold separately

Step 1:

Prepare the Door

Fold template where indicated.

a. Position template on door edge at desired lock / latch height.
b. Firmly hold template and mark latch height and hole positions at desired backset.
c. Reverse the template fold and mark the other side of the door.
d. Measure the door thickness and mark the centre on the "latch height" marking.
e. Drill Ø25mm latch hole. Note: it is important to drill this hole squarely.
f. Drill pilot holes. (suggested size Ø3 mm) Then enlarge holes following the installation template instructions.
g. Drill Ø10 mm and Ø54 mm holes from both sides of the door.
h. Mark and chisel latch faceplate to a recess of 4.0 mm. Use latch as a template.

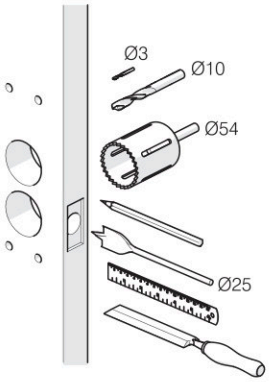

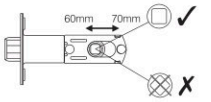

(If installing the Door Position Sensor, refer to Step 1b on page 3)

Step 2:

Install the Latch

Install latch with the tapered (bevelled), side of the bolt facing towards the door jamb when the door is open.

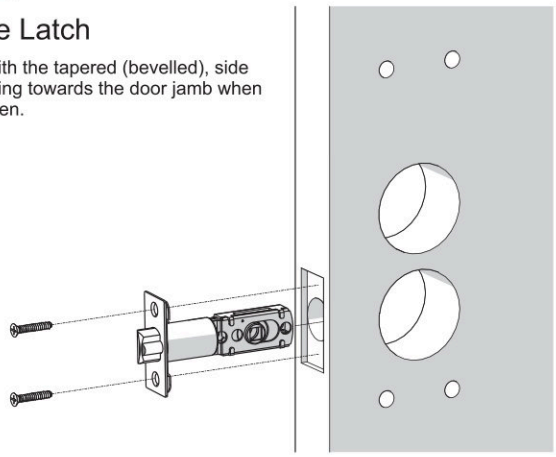

(If installing the Door Position Sensor, refer to Step 2b on page 3)

Step 3:

Prepare the Internal Furniture

Using the supplied battery cover release tool, push through the hole to release the battery cover to expose the mounting screw holes.

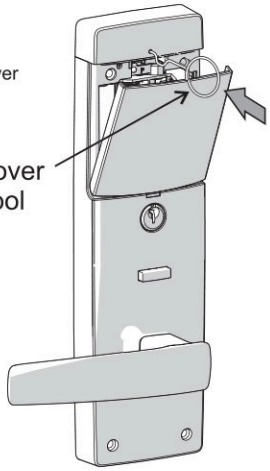

Step 4:

Handing of the Internal Lever

a. Rehand the lever (if necessary), by pushing the retaining plate inside the furniture as shown. (Push through the hole on the same side as the lever.)
b. Then swing the lever up and over to the other direction.

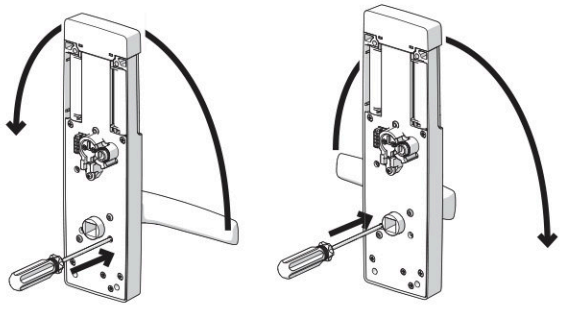

NOTES:

- **Carefully follow these instructions when installing**
- **Do not overtighten screws**
- **Use of power driver is not recommended for screw installation**
- **Fully remove the Gainsborough Freestyle prior to painting the door to avoid damaging the product's finish**
- **Suitable door thickness is between 35 and 45mm**

READY TO GET YOUR SMART HOME JOURNEY STARTED?
WATCH INSTALLATION AND SET UP VIDEOS

TRILOCK

Installation Instructions
Suits 35mm to 45mm Door Thickness

GAINSBOROUGH freestyle

Step 5:
Handing of the External Furniture

a. Rehand the lever (if necessary), by pushing the retaining plate inside the furniture as shown. Push through the hole on the same side as the lever.
b. Then swing the lever up and over to the other direction.

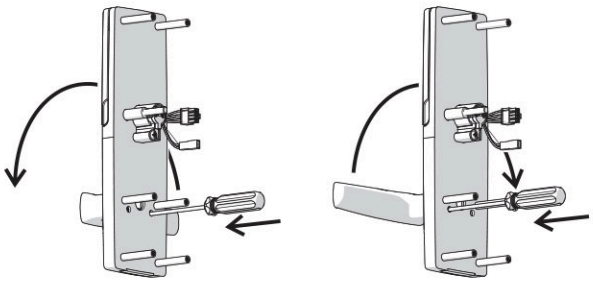

Step 6:
Assemble the External Furniture to the Door

Install the External furniture onto the door as shown.

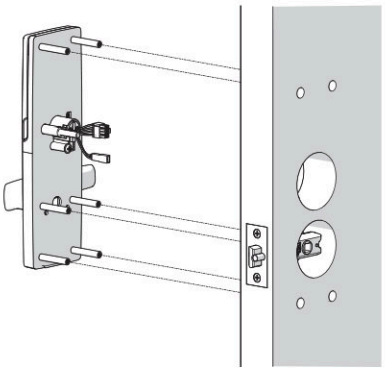

Step 7:
Install the Spindle

Fit the Spindle Spring to the Spindle, and then assemble through the latch into the External Handle.

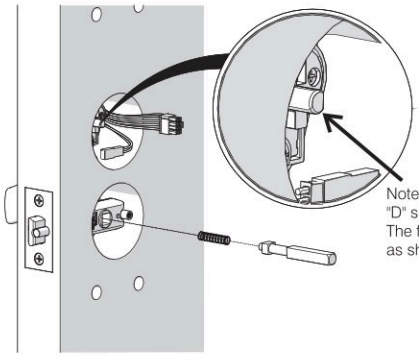

Step 8:
Connect the Internal Furniture

Connect the main loom to the Internal furniture

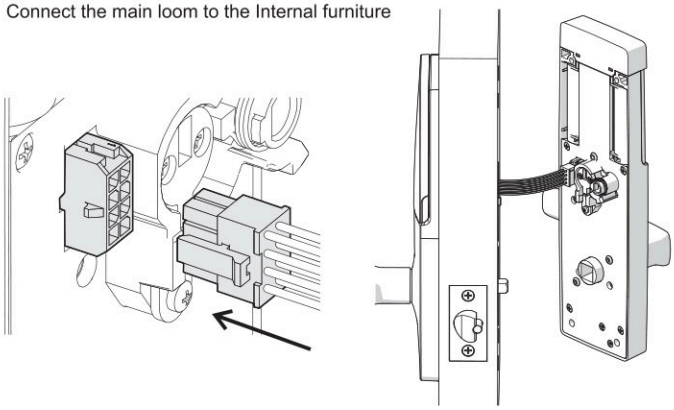

Step 9:
Connect the Internal Furniture

Ensure the internal and external drive "D" shaft and socket are aligned

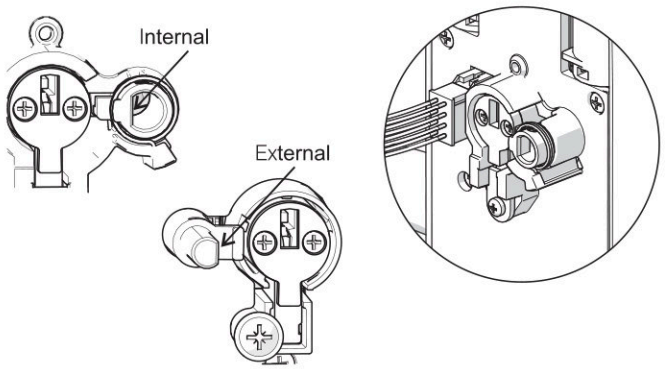

Step 10:
Secure the Internal Furniture

Install the Internal furniture, taking care:
1. to align the "D" shaft / socket and the latch spindle
2. **to ensure the loom is not pinched during assembly. This is very important.**

Fasten the Internal Furniture to the External Furniture using the 4 screws supplied with the Allen Key

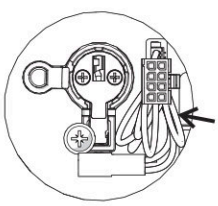

Ensure the cables are tucked in the Ø54 mm hole alongside the cylinder, and are not in a position to be pinched during assembly of the Internal Furniture.

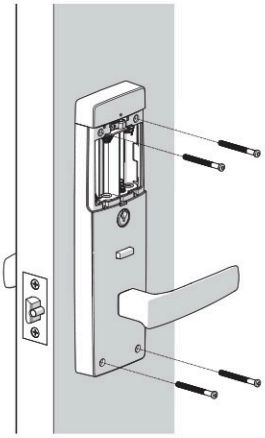

(If installing the Door Position Sensor, refer to Step 3b on page 3)

Installation Instructions
Suits 35mm to 45mm Door Thickness

GAINSBOROUGH freestyle

Step 11:
Installation of Batteries

Install the batteries and fit the battery cover.

Use only good quality AA ALKALINE batteries.

Note orientation of the batteries.

Do not mix old and new batteries.

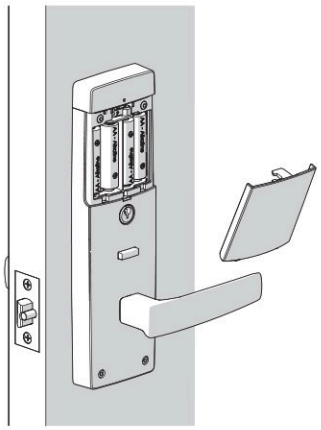

Step 12:
Installation of the Strike

All door seals must be fitted prior to fitting strike plate.

Position the door so that the centrepoint of the strike plate can be marked on door frame.

Mark and drill a Ø25mm hole to a depth of 25mm, at a corresponding height to the bolt.

Mark and chisel recesses for strike plate

Fit the strike plate using the 2 screws supplied.

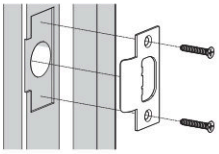

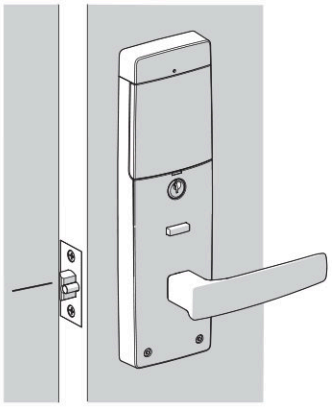

(See Step 4b below for installation of Door Sensor Magnet)

Door Position Sensor* Installation

Step 1b:
Prepare Door

Using the template provided, drill a Ø10mm hole in the side of the door as shown.

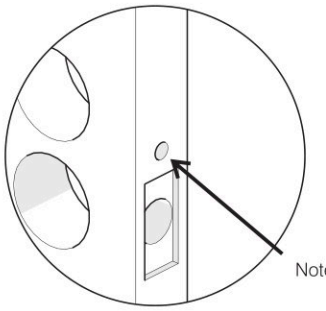

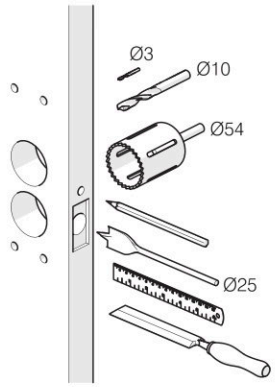

Note hole for Sensor

Step 2b:
Install Door Position Sensor in Door

Insert Door Position Sensor cable through the Ø10mm hole.
Extend it through the Ø54mm hole.
Firmly press the magnet housing into the door edge until the front face is flush with the door edge.

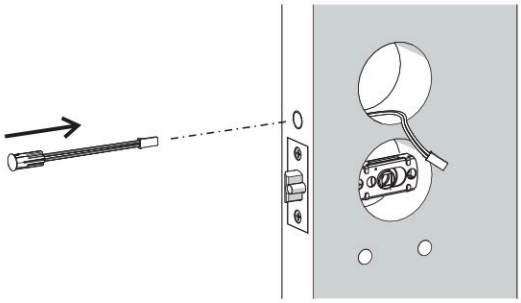

Step 3b:
Connect Door Position Sensor

Connect Door Position Sensor cable to plug on the Main cable

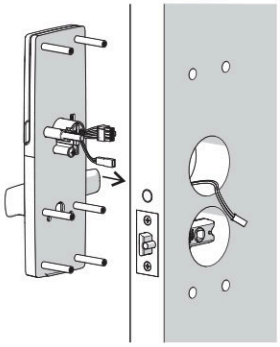

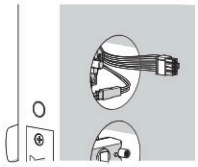

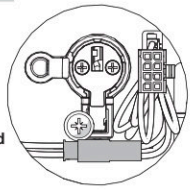

Ensure the cables are tucked in the Ø54 mm hole alongside the cylinder, and are not in a position to be pinched during assembly of the Internal Furniture.

Step 4b:
Install Door Position Magnet

Drill a Ø10mm hole for the Door Position Magnet and fit magnet as shown.

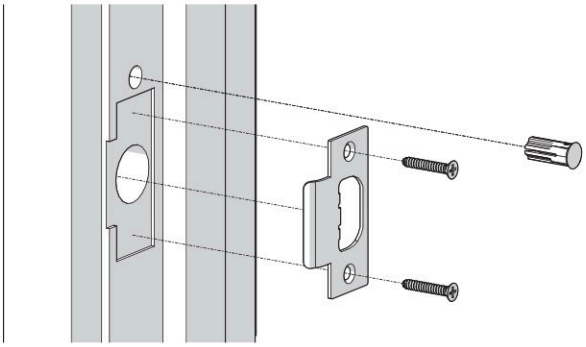

* Door Position Sensor sold separately

Installation Instructions
Suits 35mm to 45mm Door Thickness

GAINSBOROUGH freestyle

Now your lock is installed, it's time to setup.
Please refer to the separate User Guide supplied with your product for instructions.

Gainsborough Freestyle Manual Function

PASSAGE MODE

Outside **UNLOCKED**
Inside **UNLOCKED**

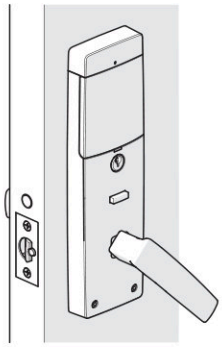

PRIVACY MODE

Outside **LOCKED**
Inside **UNLOCKED**

Press Button to engage Privacy mode.

Unlock by external key, keypad or internal by operating lever.

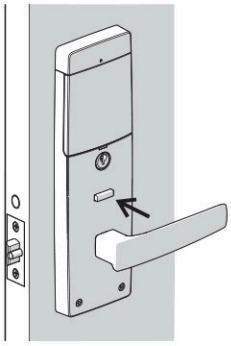

DEADLOCK MODE

Outside **LOCKED**
Inside **LOCKED**

Note: DEADLOCK can only be set via the Keypad.

Unlock by external key, keypad or internal key.

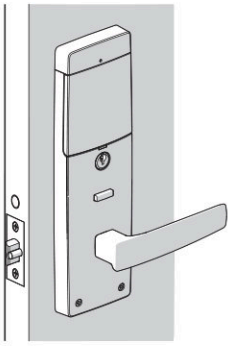

IMPORTANT

It is important not to engage the Deadlock function when there are people inside the house. Only use good quality alkaline batteries with your Gainsborough Freestyle Trilock®.

USE & CARE INSTRUCTIONS

This lockset is designed to provide the highest standard of product quality and performance. Care should be taken to ensure a long-lasting finish. When cleaning is required use a soft, damp cloth. Using lacquer thinner, caustic soaps, abrasive cleaners or polishes could damage the coating and result in tarnishing. Do not clean screen with any cleaning products containing bleach. Do not install the lock in close proximity to caustic vapours or where it may be subjected to extreme weather conditions.

WARNINGS

IMPORTANT: The accuracy of the door preparation is critical for the proper functioning and security of this product. Misalignment can cause premature wear and a lessening of security. The lock should only be serviced by a qualified technician.

Any unauthorised modifications will void your warranty and compromise your security.

ALLEGION
gainsboroughhardware.com.au

Allegion Australia
Freephone 1800 098 094
Freefax 1800 098 095
Email info.au@allegion.com
www.allegion.com.au

Allegion New Zealand
Freephone 0800 477 869
Freefax 0800 4 77 868
Email nzinfo@allegion.com
www.allegion.co.nz

TRILOCK

© Allegion 2025 | PDGA0079-R1 MAR 25