Double Toilet Roll Holder Recessed
Model No. 10-74022

www.asijdmacdonald.com.au freecall 1800 023 441 Date: April 2022



Shown: Model No. 10-74022-BD

SPECIFICATION
Recessed Dual Roll Toilet Paper Holder shall hold and dispense all standard core roll tissue up to 152mm in diameter roll and shall be fabricated of stainless steel type 304 alloy 18-8. Outer shells shall have two (2) perforated lugs for wet wall anchoring or two (2) dimpled holes for dry wall installation each. Rollers shall be chrome plated high impact resistant ABS plastic and shall be spring-loaded. Mounting style shall be wet wall or dry wall as chosen by option and indicated by code suffix. All exposed surfaces shall be satin or bright finish as chosen by option and indicated by code suffix.

INSTALLATION
For Wet wall Recessed Mounting: Slop grout into rough wall opening. Apply grout to back of unit and on perforated lugs and push unit into opening to seat flange flush with wall face. Allow unit to set and grout to cure before use.
For Standard Dry Wall Recessed Mounting: Use four (4) No 10 stainless steel Philips flat or oval head self-tapping or wood screws (by others) of suitable length to penetrate blocking in back of RWO by approximately13mm. Apply a continuous bead of silicone sealant (by others) behind flange. Tighten screws to hold flange tight against finished wall face. Wipe off excess sealant immediately.
Optional Method for Dry Wall Recessed Mounting: Order two (2) separate items Model No 39 dry wall clamps. Loosely attach clamps to the back of the unit with four (4) stainless steel Philips flat or oval head No 10B (or 10AB or 10BP) self-tapping screws (provided by others to suit wall conditions) through dimpled holes at back of shell. Apply a continuous bead of silicone sealant (by others) behind flange. Insert into RWO and adjust clamps so that they grip inside wall surface through opening. Secure accessory to clamps and wall by tightening screws. Wipe off excess sealant immediately.

For mounting height standards refer to current Building Code of Australia for able bodied and/or disabled use.

Rough wall opening (RWO) shall be 298mm x 140mm x 51mm.

WARRANTY
One year.

OPTIONS
Optional finish and mounting style must be specified as either bright or satin and wet or dry wall. Specify finish and mounting by adding code suffixes to model number.

10-74022-BD	Recessed, Bright Stainless Steel
10-74022-SD	Recessed, Satin Stainless Steel
10-74022-HBD	Recessed, Hooded, Bright Stainless Steel
10-74022-HSD	Recessed, Hooded, Satin Stainless Steel
10-74022-BSM	Surface Mounted, Bright Stainless Steel
10-74022-SSM	Surface Mounted, Satin Stainless Steel
10-74022-HBSM	Surface Mounted, Hooded, Bright Stainless Steel
10-74022-HSSM	Surface Mounted, Hooded, Satin Stainless Steel

Option-S = Satin.
Option-B = Bright polished finish.
Option-W = Wet wall installation.
Option-D = Dry wall installation.

Double Toilet Roll Holder Recessed shall be Model No.10-74022 as supplied by ASI JD MacDonald. (10-39 mounting clamp for dry walls).

All ASI JD MacDonald disabled compliant products when installed must be in accordance with AS1428 to ensure the specified product is complying with all washroom specification requirements.

ASI JD MacDonald reserves the right to, and does from time to time, make changes and improvements in design and dimensions. The photographs and line drawings of the products in this flyer are representational only. All dimensions are in millimetres unless otherwise stated.

Double Toilet Roll Holder
Recessed
Model No. 10-74022

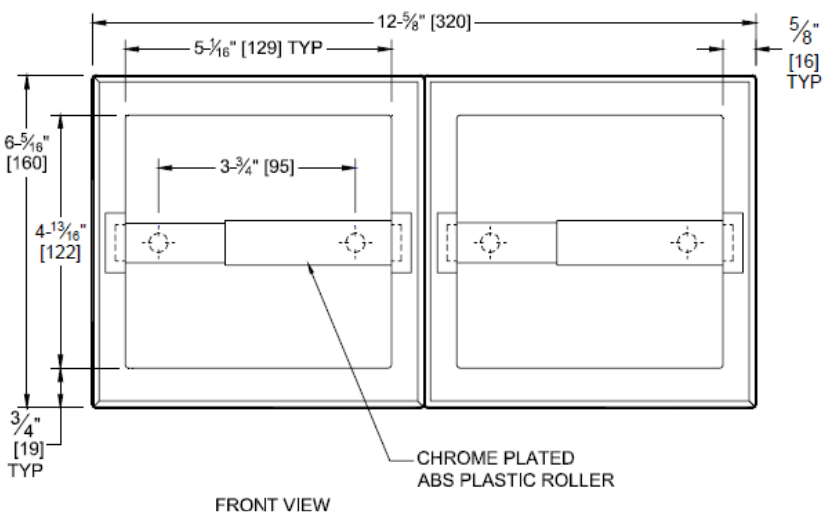

FRONT VIEW

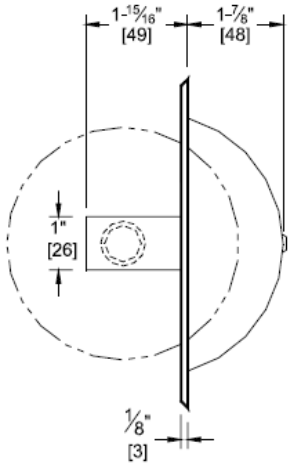

SIDE VIEW

NOTE;
ALL DIMS
INCH [MM]

ASI JD MacDonald reserves the right to, and does from time to time, make changes and improvements in design and dimensions. The photographs and line drawings of the products in this flyer are representational only. All dimensions are in millimetres unless otherwise stated.