Double Toilet Roll Holder
Surface Mounted with Hood-Satin
Model No. 10-74022-HSSM

www.asijdmacdonald.com.au freecall 1800 023 441 Date: April 2022

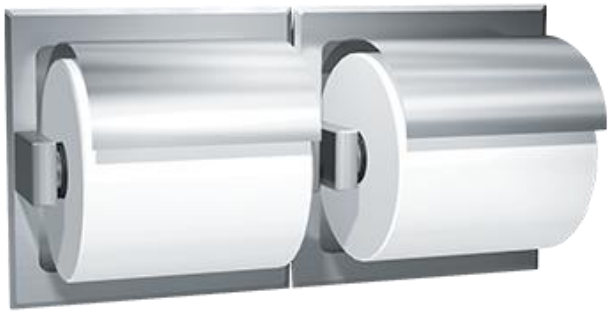

Shown: Model No. 10-74022-H

SPECIFICATION
Surface Mounted Dual Roll Toilet Paper Holder with Hood shall hold and dispense all standard core roll tissue up to 152mm in diameter roll and shall be fabricated of stainless steel type 304 alloy 18-8. Each outer shell shall have two (2) dimpled holes for dry wall installation. Hoods shall be attached to top of unit with full-length brass pivot rods. Rollers shall be chrome plated high impact resistant ABS plastic and shall be spring-loaded. All exposed surfaces shall be satin or bright finish as chosen by option and indicated by code suffix.

INSTALLATION
For Standard Dry Wall Mounting: Locate unit and transfer hole positions to wall. Drill four (4) 5.6mm in diameter clearance holes through tile and/or wallboard only. Use four (4) No 10 stainless steel Philips flat or oval head self-tapping or wood screws (by others) of suitable length to penetrate blocking in wall by approximately 13mm. Tighten screws to hold unit tight against finished wall face.
Optional Method for Dry Wall Mounting: Locate unit and transfer hole positions to wall. Drill four (4) holes appropriate for expansion anchors into masonry substrate. Tap proper expansion anchors (provided by others to suit wall conditions) into wall to be flush with wall face. Use four (4) stainless steel Philips flat or oval head No 10AB self-tapping screws (provided by others to suit wall conditions) through dimpled holes at back of shell. Tighten screws to hold unit tight against finished wall face.

For mounting height standards refer to current Building Code of Australia for able bodied and/or disabled use.

WARRANTY
One year.

OPTIONS
Optional finish and mounting style must be specified as either bright or satin and wet or dry wall. Specify finish and mounting by adding code suffixes to model number.

10-74022-BD	Recessed, Bright Stainless Steel
10-74022-SD	Recessed, Satin Stainless Steel
10-74022-HBD	Recessed, Hooded, Bright Stainless Steel
10-74022-HSD	Recessed, Hooded, Satin Stainless Steel
10-74022-BSM	Surface Mounted, Bright Stainless Steel
10-74022-SSM	Surface Mounted, Satin Stainless Steel
10-74022-HBSM	Surface Mounted, Hooded, Bright Stainless Steel
10-74022-HSSM	Surface Mounted, Hooded, Satin Stainless Steel

Option-S = Satin.
Option-B = Bright polished finish.
Option-W = Wet wall installation.
Option-D = Dry wall installation.

Double Toilet Roll Holder Surface Mounted with Hood Satin shall be Model No.10-74022-HSSM as supplied by ASI JD MacDonald. (10-39 mounting clamp for dry walls).

All ASI JD MacDonald disabled compliant products when installed must be in accordance with AS1428 to ensure the specified product is complying with all washroom specification requirements.

ASI JD MacDonald reserves the right to, and does from time to time, make changes and improvements in design and dimensions. The photographs and line drawings of the products in this flyer are representational only. All dimensions are in millimetres unless otherwise stated.

Double Toilet Roll Holder
Surface Mounted with Hood-Satin
Model No. 10-74022-HSSM

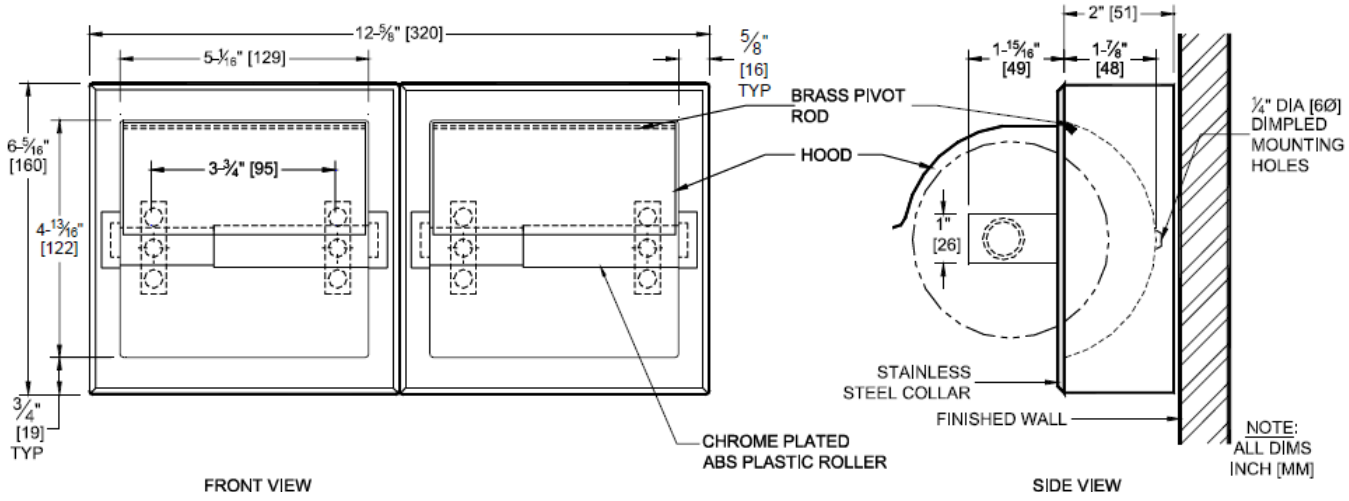

ASI JD MacDonald reserves the right to, and does from time to time, make changes and improvements in design and dimensions. The photographs and line drawings of the products in this flyer are representational only. All dimensions are in millimetres unless otherwise stated.