Bench Mounted Soap Dispenser
Model No. 10-0332

www.asijdmacdonald.com.au freecall 1800 023 441 Date: March 2021



SPECIFICATION
Bench Mounted Soap Dispenser shall hold and dispense 1L of liquid soap having a pH in range 7 ± 1.5 and viscosity in range 50-2500 cP (mPa•s). Soaps containing reportable salts, chlorides and alcohol should be avoided. Soap container shall be translucent, shatter resistant polyethylene. Dispenser stem and 102mm spout shall be stainless steel with rubber duckbill check valves and an O-ring seal. Valve body, internal parts, basin nut, threaded shank and globe adapter shall be molded plastic. Spring, escutcheon washer, stem retainer collar and screw shall be stainless steel. Escutcheon shall be chrome-plated brass. Vandal-resistant spout shall rotate 360° without damage to unit.

INSTALLATION
Unit is typically located adjacent to a flush mounted bench, through 22mm diameter cut out (by others) in counter top. An adjustable threaded shank allows for installation in counter tops up to 89mm thick.

SOAP REQUIREMENTS
Proper usage of this dispenser requires, that only soap within the following range for viscosity and pH may be used:

- Viscosity Range (mPa·s or cP): 50 – 2500
- pH Range: 5.5 ~ 8.5

OPERATION
Soap is manually dispensed by pushing down on the spout stem. Dispense volume is typically 0.8ml for liquid soap in correct viscosity range. Dispenser is refilled from above counter top by using the special refill key to unlock the escutcheon and remove the valve body with dip tube from the shank to expose reservoir opening. Pour soap directly into the opening until the level reaches the neck of the reservoir below the vanity.

WARRANTY
One year.

OPTIONS Spout option may be combined with globe option. Specify option by adding suffix to Model No (e.g. 10-0332-CD).

Model	Capacity	Spout Length
10-0332	1.0 litres	102mm
10-0332-C	0.6 litres	102mm
10-0332-CD	0.6 litres	152mm
10-0332-D	1.0 litres	152mm

Bench Mounted Soap Dispenser shall be Model No. 10-0332 as supplied by ASI JD MacDonald.

ASI JD MacDonald reserves the right to, and does from time to time, make changes and improvements in design and dimensions. The photographs and line drawings of the products in this flyer are representational only. All dimensions are in millimetres.

Bench Mounted
Soap Dispenser
Model No. 10-0332

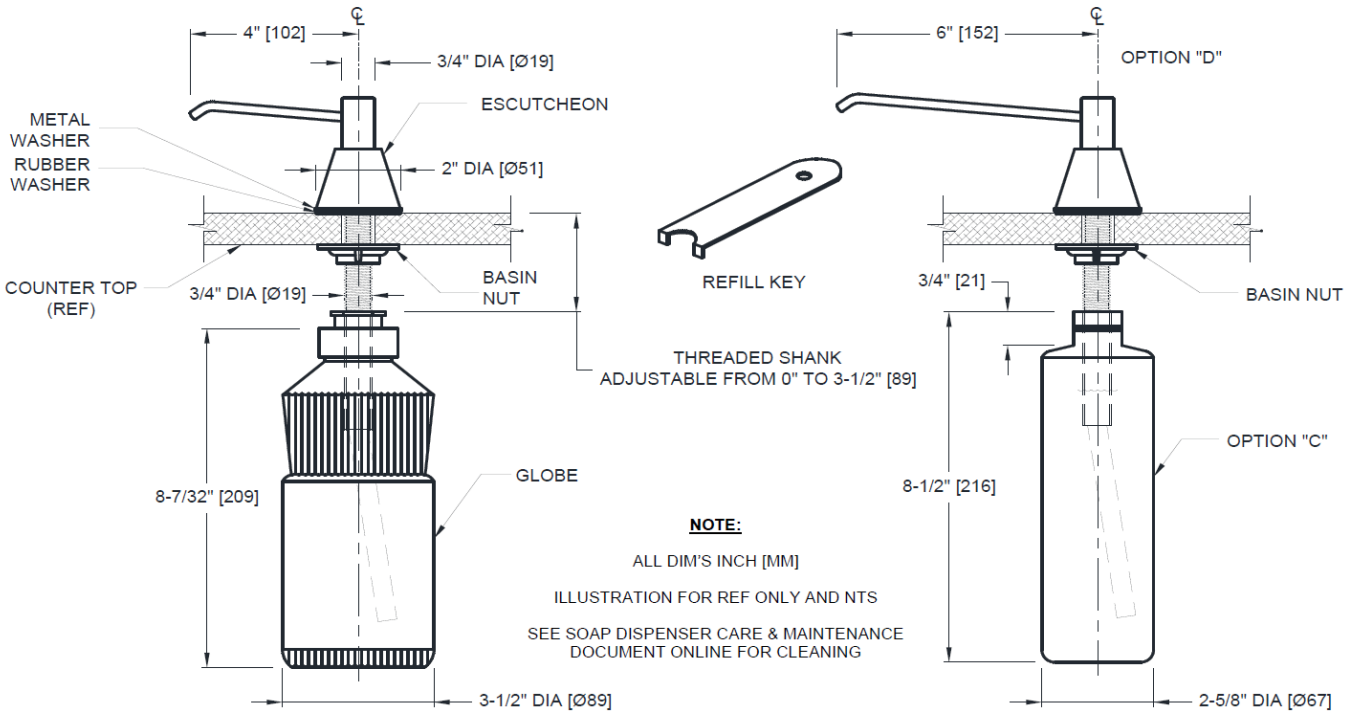

NOTE:

ALL DIM'S INCH [MM]

ILLUSTRATION FOR REF ONLY AND NTS

SEE SOAP DISPENSER CARE & MAINTENANCE DOCUMENT ONLINE FOR CLEANING

ASI JD MacDonald reserves the right to, and does from time to time, make changes and improvements in design and dimensions. The photographs and line drawings of the products in this flyer are representational only. All dimensions are in millimetres.