Holemaker
Drilling Solutions By ITM ®

ITM TOOLS
www.itmtools.com.au

MAGSLOT 20-XY

DUAL-AXIS MAGNETIC MILLING MACHINE

USER MANUAL **Model: HMMS-20XY**

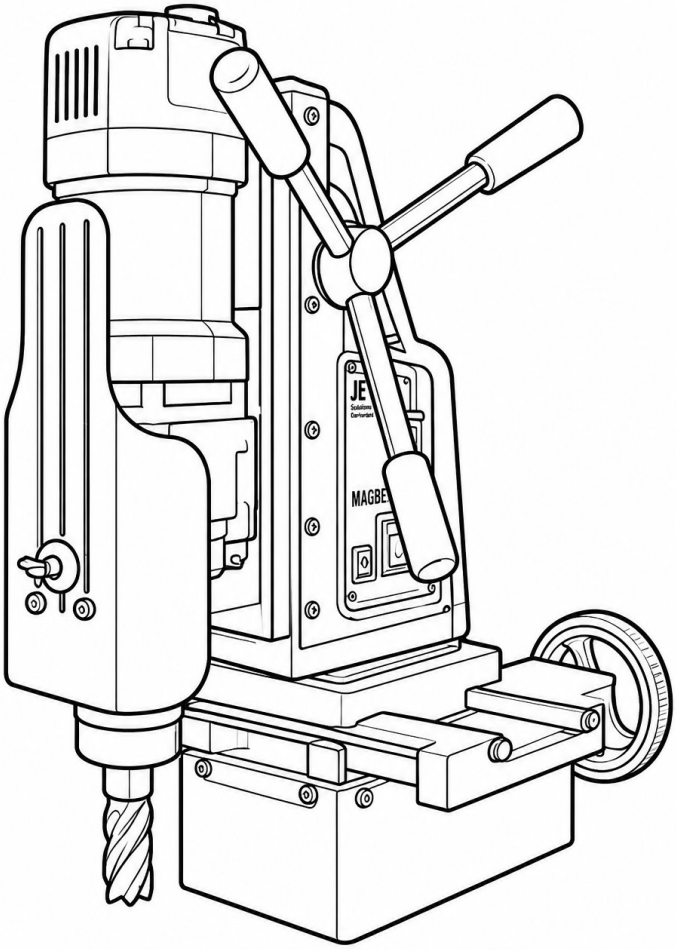

TO PREVENT SERIOUS INJURY OR DAMAGE TO YOUR MACHINE, READ AND UNDERSTAND ALL WARNINGS AND INSTRUCTIONS BEFORE USE

Ver: 1.0

LIMITED WARRANTY

Vaneega Pty Ltd t/as ITM Tools (ITM Tools) will, within twelve (12) months from the original date of purchase, repair or replace any goods found to be defective in materials or workmanship.

This warranty is void if the item has been damaged by accident, neglect, improper service or other causes not arising out of defects in materials or workmanship. This warranty does not apply to machines and/or components which have been altered, changed, or modified in any way, or subjected to overloading or use beyond recommended capacities and specifications. Worn componentry due to normal wear and tear is not a warranty claim. Goods returned defective shall be returned prepaid freight to ITM Tools or an agreed repair agent, which shall be the buyer's sole and exclusive remedy for defective goods. ITM Tools accepts no additional liability pursuant to this guarantee for the costs of travelling or transportation of the product or parts to and from ITM Tools or the service agent or dealer; such costs are not included in this warranty.

Our goods come with guarantees which cannot be excluded under the Australian Consumer Law. You are entitled to a replacement or refund for a major failure and to compensation for other reasonably foreseeable loss or damage. You are also entitled to have the goods repaired or replaced if the goods fail to be of acceptable quality and the failure does not amount to a major failure.

THE MANUFACTURER RESERVES THE RIGHT TO MAKE IMPROVEMENTS AND MODIFICATIONS TO DESIGN WITHOUT PRIOR NOTICE.

PRODUCTS IMPORTED AND DISTRIBUTED NATIONALLY BY ITM TOOLS
11 Eastern Service Road, Stapylton QLD 4207
T: 07 3287 1114 | E: sales@itmtools.com.au | W: www.itmtools.com.au

ITM TOOLS
11 Eastern Service Road, Stapylton QLD 4207
T: 07 3287 1114 | E: sales@itmtools.com.au
www.itmtools.com.au

CONTENTS

MAGSLOT 20-XY Dual-Axis Magnetic Milling Machine User Manual

LIMITED WARRANTY 1

1 GENERAL INFORMATION 3

2 GENERAL SAFETY ADVICE 4

2.1 The Milling Machine Must Not Be Used When 4

2.2 Before Using the Machine 4

2.3 Safe Operating Practices 5

3 STANDARD EQUIPMENT 7

4 MACHINE SET UP 8

4.1 ER32 Collet System 8

4.2 Workpiece Preparation 9

4.3 Machine Controls and Axis Identification 10

5 OPERATING THE MACHINE 11

5.1 Slot Milling Procedure 11

6 MAINTENANCE AND SERVICE 13

7 ELECTRICAL DIAGRAM 14

8 MOTOR DIAGRAM 15

8.1 Motor Diagram Parts List 16

9 TECHNICAL DATA 17

10 PARTS LIST 18

11 END MILL PART LIST 20

11.1 HSS Standard - General Purpose 20

11.2 Cobalt (CO8) - High Performance 20

1 GENERAL INFORMATION

WARNING

1. Before you start working with the machine, please read these instructions carefully. Take special note of the safety recommendations.
2. Please read and save these instructions for future reference.

Thank you for purchasing your **MAGSLOT 20-XY** portable milling machine.

The **MAGSLOT 20-XY** is a portable dual-axis magnetic milling machine designed for the accurate production of slots, apertures and general milling operations in steel plate, structural steelwork and fabrication applications.

Unlike conventional magnetic drilling machines, the **MAGSLOT 20-XY** incorporates independent X and Y axis positioning systems, providing 115 mm of travel in both directions. This allows the operator to accurately position the end mill and perform slot milling, aperture creation and controlled material removal without repositioning the magnetic base.

Equipped with a powerful 1100 W motor and an ER32 collet system capable of accepting end mills from M3 to M20, the machine is built for precision, durability and reliable performance.

The **MAGSLOT 20-XY** is ideal for steel fabrication, structural steelwork, maintenance, repair and site-based machining applications where portability and precision are essential.

Key features

- Dual-axis positioning
- 115 mm travel on both axes
- 1100 W powerful motor
- ER32 collet system (M3 - M20)
- 2500 kg holding force
- Manufactured in the UK

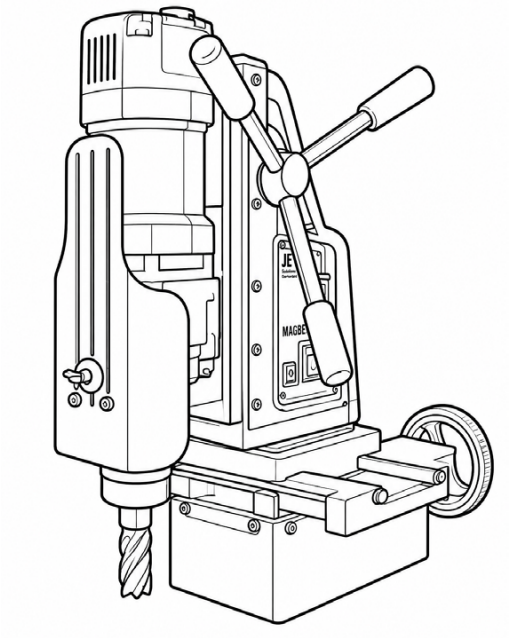

Fig. 1-1 MAGSLOT 20-XY dual-axis magnetic milling machine

2 GENERAL SAFETY ADVICE

2.1 The Milling Machine Must Not Be Used When

1. The operator has not read the User Manual.
2. The planned work does not align with the recommendations outlined in the User Manual.
3. The machine is either incomplete or has been repaired using non-original parts.
4. Power supply parameters do not conform to those stated on the motor's plate.
5. The operator neglected to inspect the milling machine, power cable, control panel and end mill cutter.
6. The power supply socket lacks a necessary protection circuit.
7. The machine is not secured with a safety chain, leaving it vulnerable to falling, particularly when used at height or in a vertical/inverted orientation.
8. Individuals are present in close proximity to the operating machine.

WARNING

Failure to follow these safety instructions can result in serious injury or damage to the equipment. Always operate the machine responsibly and with care.

2.2 Before Using the Machine

Electrical safety

1. Inspect the power cord, plug and electrical components before use.
2. Connect the machine to a suitable grounded electrical power supply.
3. When used on construction sites, power the machine through a suitably rated separation transformer where required.
4. Ensure the supply voltage matches the machine rating shown on the motor plate.

Environmental conditions

5. Do not expose the machine to rain, snow or excessive moisture.
6. Do not use the machine in explosive or hazardous environments.
7. Ensure the work area is adequately illuminated.

Magnetic base requirements

8. Minimum plate thickness is 10 mm.
9. Do not operate on rusty, painted or uneven surfaces.
10. Ensure the workpiece is suitable for magnetic adhesion.
11. Clean the work surface before positioning the machine.
12. Use the supplied safety chain when operating vertically or overhead.
13. Ensure the entire magnetic base is in contact with the workpiece.

Machine inspection

14. Inspect the machine before use.
15. Ensure all guards are fitted and secure.
16. Check guide slides for excessive wear or looseness.
17. Ensure all fasteners are secure.
18. Verify that all controls operate correctly.

IMPORTANT - SAFETY CHAIN
Always secure the safety chain through the handle. The chain must be securely wrapped around the anchoring element to prevent it from becoming loose. Never rely solely on the magnetic base when working in a vertical, inverted or overhead position.

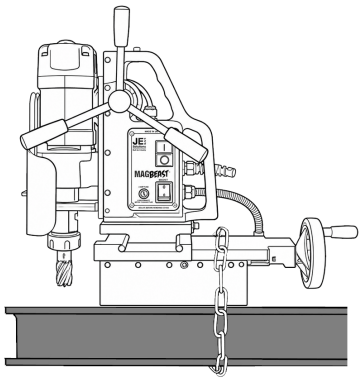

Fig. 2-1 Safety chain secured through the handle and around the anchoring element

2.3 Safe Operating Practices

Cutter safety

1. Use only end mills in good condition.
2. Ensure end mills are correctly secured in the ER32 collet.
3. Never touch the end mill during operation.
4. Do not remove chips by hand. Always use a magnetic brush.

During operation

5. Keep hands clear of moving components.
6. Do not force the end mill into the workpiece.
7. Use suitable lubrication or coolant during use.
8. Remove material using multiple passes.
9. A maximum depth of approximately 5 mm per pass is recommended, depending on cutter size and material.
10. The absolute maximum cutting depth is 10 mm.

General safety

11. Disconnect the machine from the power supply before carrying out any maintenance, adjustments or changing end mills.
12. Never operate the machine with damaged guards, cables or components.
13. Use only accessories and replacement parts recommended by ITM Tools.
14. Stop operation immediately if unusual vibration, noise or other irregularities occur.
15. Remove the machine from service if it has been dropped, subjected to impact or otherwise damaged.

WARNING

DO NOT TOUCH OR REPLACE THE END MILL WHILE THE MACHINE IS CONNECTED TO A POWER SUPPLY. ALWAYS ISOLATE THE MACHINE BEFORE MAKING ANY ADJUSTMENTS OR MAINTENANCE.

IMPORTANT

Follow all instructions in this manual and observe all safety precautions. Failure to do so may result in serious injury, damage to the machine or damage to the workpiece.

Slots must be created from existing or pre-drilled holes.

3 STANDARD EQUIPMENT

The **MAGSLOT 20-XY** is supplied with the following items:

 **Robust Carry Case**	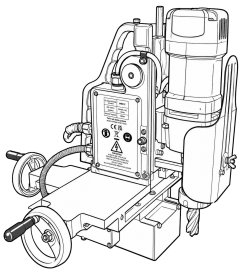 **MAGSLOT 20-XY** **Dual-Axis Magnetic Milling Machine**	 **ER32 Collet Set (M3 - M20)**
 **ER32 Collet Spanner**	 **Collet Locking Key**	 **Spoke Handles**
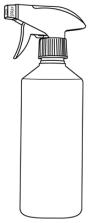 **Coolant Bottle**	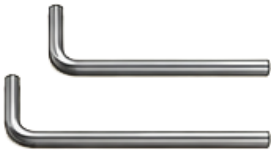 **Allen Keys**	 **Safety Chain with Snap Hook**
 **User Manual**		

Optional accessory



Cutter Adaptor

Transform your **MAGSLOT 20-XY** into a magnetic drilling machine with the optional cutter adaptor.

4 MACHINE SET UP

4.1 ER32 Collet System

The **MAGSLOT 20-XY** is equipped with an ER32 collet chuck (Fig. 4-1) designed for the secure installation of end mill cutters M3 - M20.

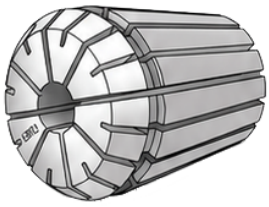

Fig. 4-1 ER32 collet

To use the collet chuck, first select a collet size that matches the diameter of your end mill. Screw the collet firmly into the chuck until it is fully seated.

Next, select an end mill with a shank size that matches your milling tool, and insert the tool and collet together into the chuck (Fig. 4-2).

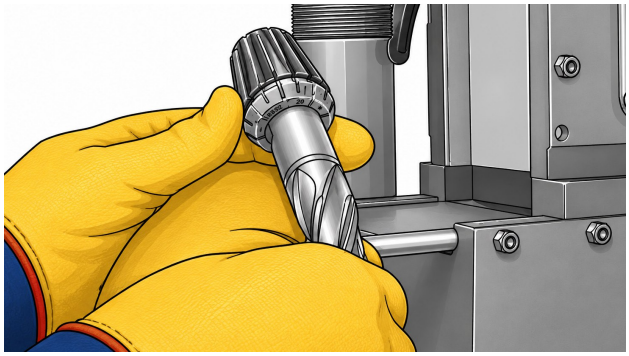

Fig. 4-2 Inserting the end mill and collet into the chuck

Insert the collet and end mill into the machine arbor, then place the securing nut over the assembly. Tighten the thread by hand until snug. Next, position the supplied spanner over the ridges on the securing nut and lock the machine arbor into place using the locking key. Finally, turn the spanner clockwise until the milling cutter is fully secured within the collet (Fig. 4-3).

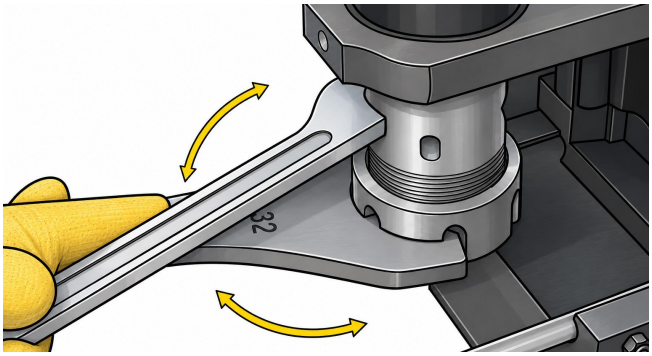

Fig. 4-3 Tightening the securing nut with the spanner and locking key

To securely install the milling cutter, insert it and then use the supplied spanner and locking key to tighten the tool firmly in place (Fig. 4-4).

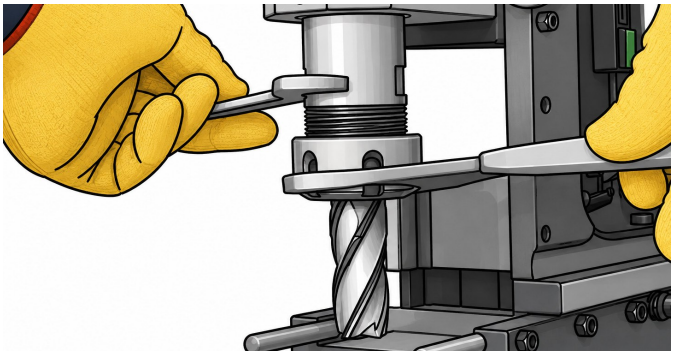

Fig. 4-4 Milling cutter installed and secured

4.2 Workpiece Preparation

Before positioning the machine on the workpiece, always ensure the following:

- The workpiece is made of steel.
- The workpiece thickness is at least 3/8″ (10 mm) (Fig. 4-5).
- The surface of the steel under the magnet is flat.
- The surface where you intend to place the milling machine has been wiped, brushed or sanded down to remove any rust, paint, dirt or other contaminants that could reduce the adhesive power of the electromagnetic base.

> The **MAGSLOT 20-XY** features a dual-axis slide system that allows the cutter position to be adjusted after the magnetic base has been engaged. This enables accurate positioning of the cutter without repositioning the machine.

Next, install the end mill before plugging into the power source. Then plug it in and position it where you wish to use it. Please refer to section 4.1 for cutter installation instructions.

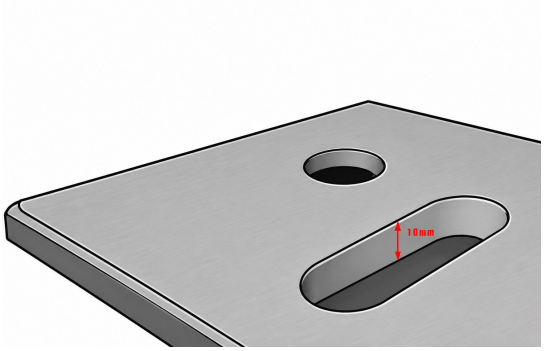

Fig. 4-5 Minimum plate thickness 10 mm

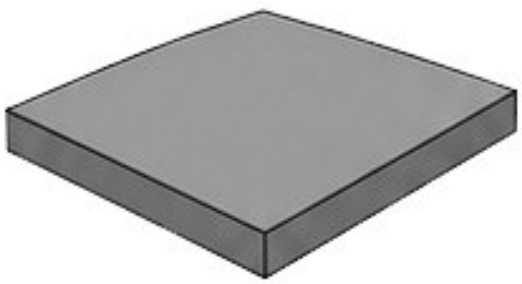

Fig. 4-6 Clean, flat surface for magnetic adhesion

4.3 Machine Controls and Axis Identification

The **MAGSLOT 20-XY** features independent X and Y axis slide systems providing 115 mm of travel in both directions. Vertical movement is controlled by the machine's three spoke handles.

No.	Control	Function
1	Spoke Handles	Controls vertical up/down travel
2	Motor Switch	Starts and stops the motor
3	Magnet Switch	Activates/deactivates the magnetic base
4	End Mill	Milling cutter (M3 - M20)
5	X-Axis	Left/right travel (maximum 115 mm)
6	Y-Axis	Forward/backward travel (maximum 115 mm)
7	Feed Lock	Fixes the milling depth

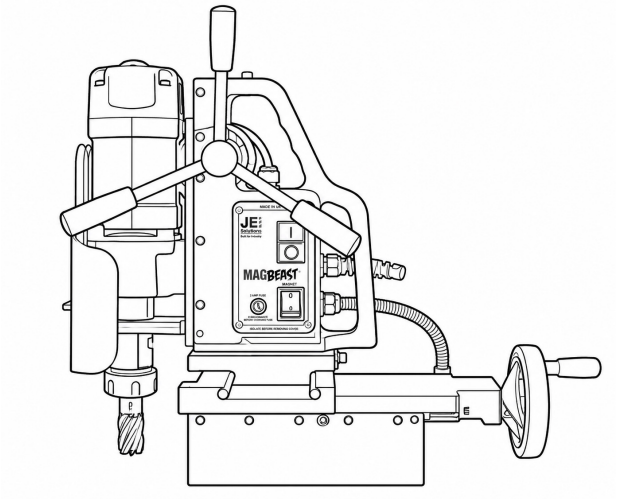

Fig. 4-7 Machine controls (side view)

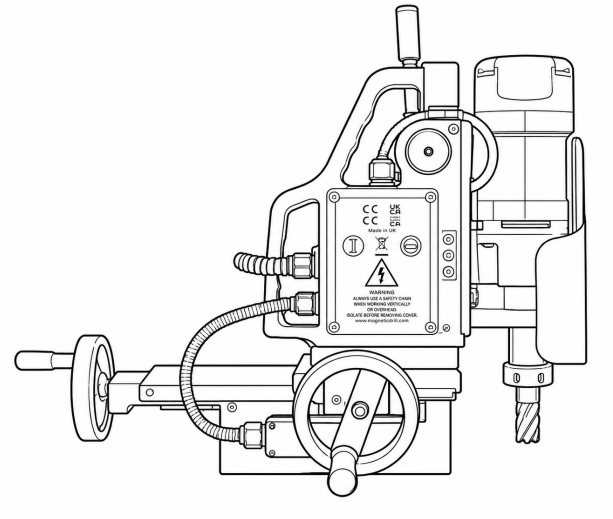

Fig. 4-8 Machine controls (front view)

NOTE
Keep moving parts free of swarf to ensure accuracy during operation.

5 OPERATING THE MACHINE

5.1 Slot Milling Procedure

Follow the procedure below to produce accurate slots using the **MAGSLOT 20-XY**.

1. Prepare the Workpiece

Drill a series of holes along the intended slot path. Drilling a series of holes significantly reduces cutting force, improves end mill life and speeds up the process.

Ensure the hole diameter matches the diameter of the end mill.

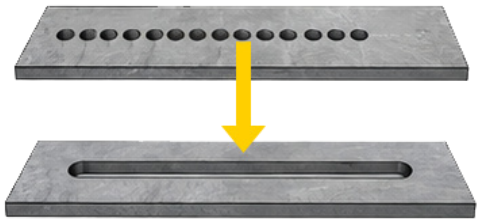

2. Position the End Mill

Position the end mill centrally over the first hole.

Adjust the X and Y axis handwheels until the end mill is correctly aligned.

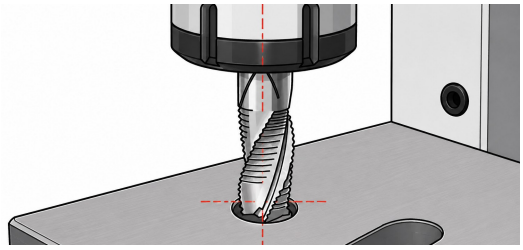

3. Engage the Magnetic Base

Connect the machine to the power supply. Press the magnet switch to secure the machine to the workpiece.

Minimum thickness 10 mm. The surface must be clean, flat and free of paint, rust or debris.



4. Set the Cutting Depth

Lower the end mill to the desired depth in the starter hole using the spoke handles.

Please note: a depth of 5 mm per pass is recommended.

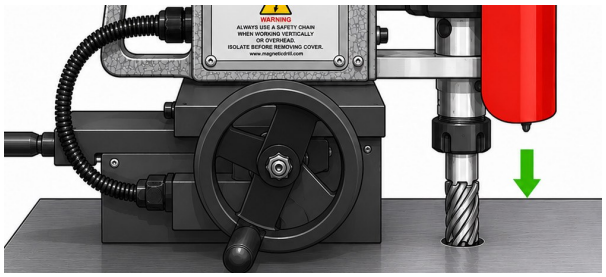

5. Lock the Feed

Once the desired depth has been set, tighten the feed lock to prevent accidental movement during milling.

Use the 5 mm Allen key provided.

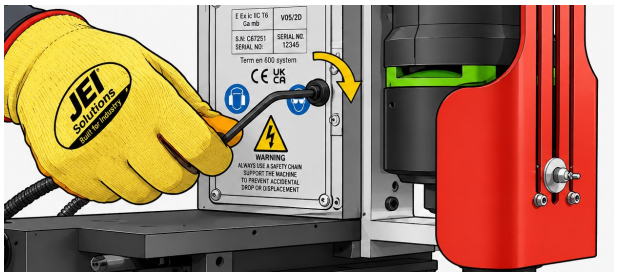

6. Start the Motor

Press the green start button.

Allow the end mill to reach full operating speed before beginning the cut.

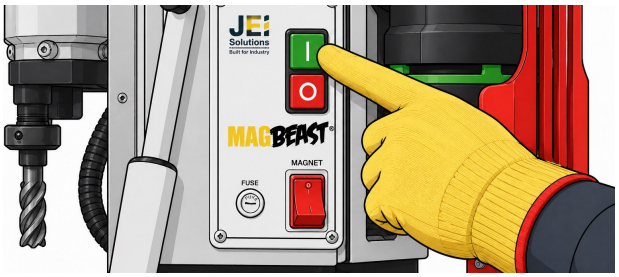

7. Use the X-Axis Handwheel

Rotate the X-Axis handwheel clockwise to move the end mill forward and backwards to create your slot. Use lubricant to keep the cutter cool and extend tool life.

Please note: a depth of cut of 5 mm per pass is recommended.



8. Completed Slot

Continue advancing the handwheel until the desired slot length is achieved.

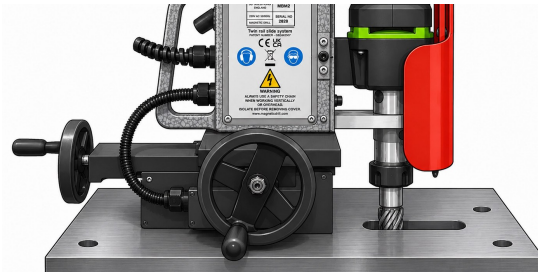

PLEASE NOTE

Slots must be created from existing or pre-drilled holes.

6 MAINTENANCE AND SERVICE

Keep your **MAGSLOT 20-XY** in safe working condition by carrying out the following routine inspections.

Interval	Inspection
Check with every use	• Inspect power cable and plug • Check switches for damage • Clean magnet contact surface
Check every 50 hours	• Check slide guide adjustment • Lubricate slide rails and rack system • Ensure smooth X/Y movement
Check every 100 hours	• Inspect carbon brushes • Replace if less than 5 mm long
Spare parts	Use only genuine replacement parts. When ordering, quote the machine model and serial number.

LUBRICATION AND RUST PREVENTION
Regularly lubricate the brass slide guide inserts, as well as the rack and pinion, with grease. To prevent the machine from rusting, especially when used outdoors, all steel parts should be covered with a thin layer of grease.

IMPORTANT

If the machine is dropped, damaged, submerged in water or subjected to impact, stop operation and return the machine for professional inspection.

Spare parts

When ordering spare parts, quote the item number and part number as listed in the parts lists in this manual.

7 ELECTRICAL DIAGRAM

> Refer servicing and fault diagnosis to qualified electrical personnel only.

Wiring schematic for the **MAGSLOT 20-XY**.

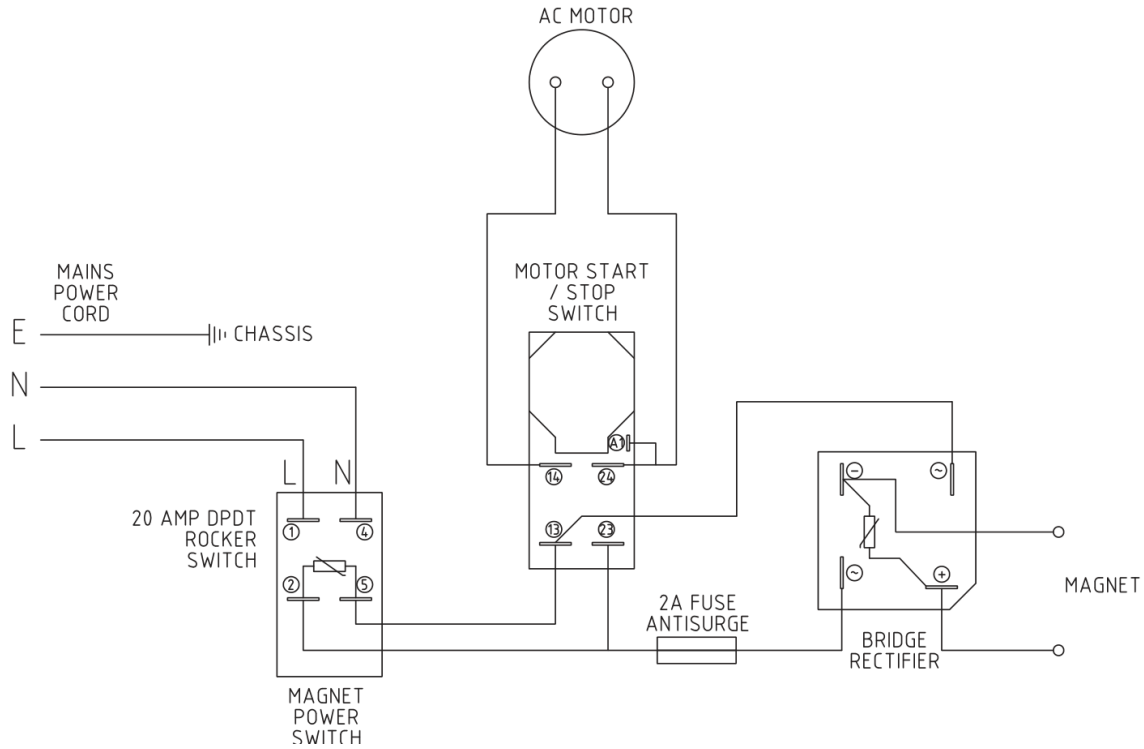

Fig. 7-1 MAGSLOT 20-XY wiring schematic

8 MOTOR DIAGRAM

Exploded diagram of the **MAGSLOT 20-XY** motor assembly and gearbox components. Refer to the parts list in section 8.1 for part names, numbers and quantities.

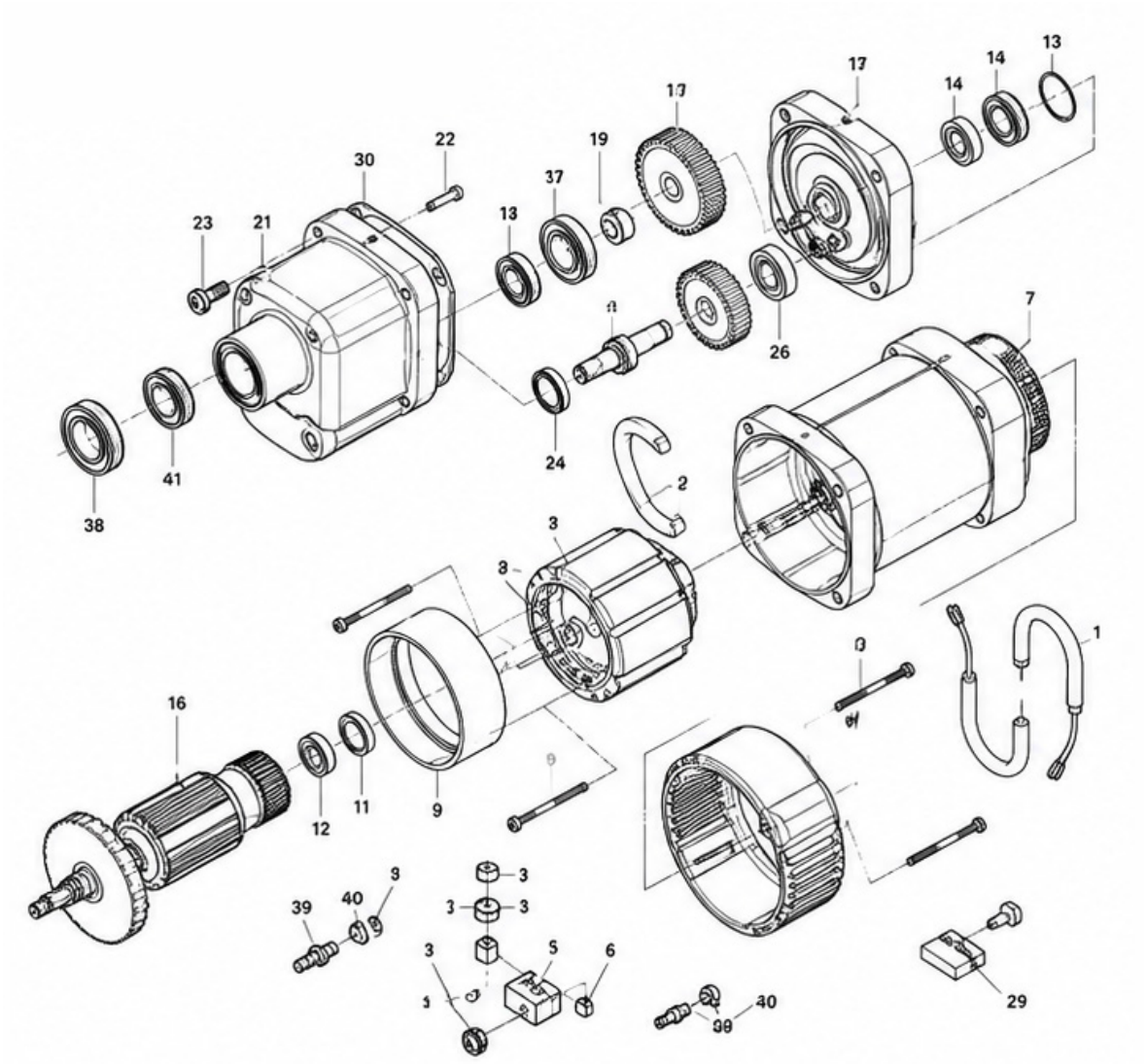

Fig. 8-1 Motor assembly and gearbox exploded diagram

When ordering spare parts, quote the item number and part number as listed in section 8.1.

8.1 Motor Diagram Parts List

No.	Description	Part Number	Pieces
1	Cap Screws HC 4, 8x50	HM40.EX-01	4
2	Motor Top Cap	HM40.EX-02	1
3	Brusholder Assembly	HM56	2
4	Carbon Brush 6,3,10x18	HM57	2
5	Brusholder Mount Screw ZM4x12	HM111	4
6	Washer	HM109	4
7	Motor Housing	HM40.EX-07	1
8	Field Coil	HM40.EX08	1
9	Screw	HM543	2
10	Fan Ring	E55611	1
11	O-Ring 22x2.5	HM512	1
12	Bearing 608 2Z	HM40.EX-12	1
13	Circlip/Locking Ring 28/1.2	HM121	1
14	Bearing 6001 2Z	HM40.EX-14	1
15	Circlip	E55633EX	1
16	Armature	HM40.EX16	1
17	Spindle Gear	HM40.EX-17	1
18	Shim Washer	HM40.EX-18	1
19	Bearing 6003 2RS	HM40.EX-19	1
20	Spindle: Weldon 19mm	HM40.EX-20	1
21	Gearbox Housing	HM40.EX-21	1
22	Dowel Pin 4x12	HM511	1
23	Screw HC 4.8x38	HM541T	4
24	Bearing 608	HM40.EX-24	2
25	Gear	HM40.EX-25	1
26	Gear Shaft	HM40.EX-26	1
27	Back Plate HM40/HM50	HM50BP	1
28	Cable Flex	HM40.EX-28	1
29	Suppressor	HM113	1
30	Gasket	HM40.EX-30	1
31	Spring 1x9x107	HM40.EX-31	1
32	Piston	HM40.EX-32	1
33	Circlip/Gearbox Gasket	HM40.EX-33	1
34	O-Ring	HM40.EX-34	1
35	Washer	HM40.EX-35	1
36	Secure Screw	HM40.EX-36	3
37	Seal D20/28/4	HM40.EX-37	1
38	Seal D20/30/7	HM40.EX-38	1
39	Washer 1/8"	HM40.EX-39	1
40	Hose Tail 1/8"	HM40.EX-40	1
41	Bearing 6904 2RS	HM40.EX-41	1

9 TECHNICAL DATA

Specification	Value
Power supply	110-120 V 50/60 Hz~ / 220-240 V 50/60 Hz~
Motor power	1100 W
Tool holder	ER32 collet
Max. milling cutter diameter	20 mm
Max. drilling diameter	20 mm
Max. milling depth	10 mm
Minimum workpiece thickness	10 mm
Insulation class	I
Standard adhesive force of electromagnet	25000 N
Slide stroke	124 mm
Machine speed (under load)	440 rpm
Electromagnetic base	84 x 168 x 41.5 mm
Length of the power cord	3.0 m
Total weight	24 kg
Noise level	above 85 dB
Surrounding temperature	0°C – 40°C

10 PARTS LIST

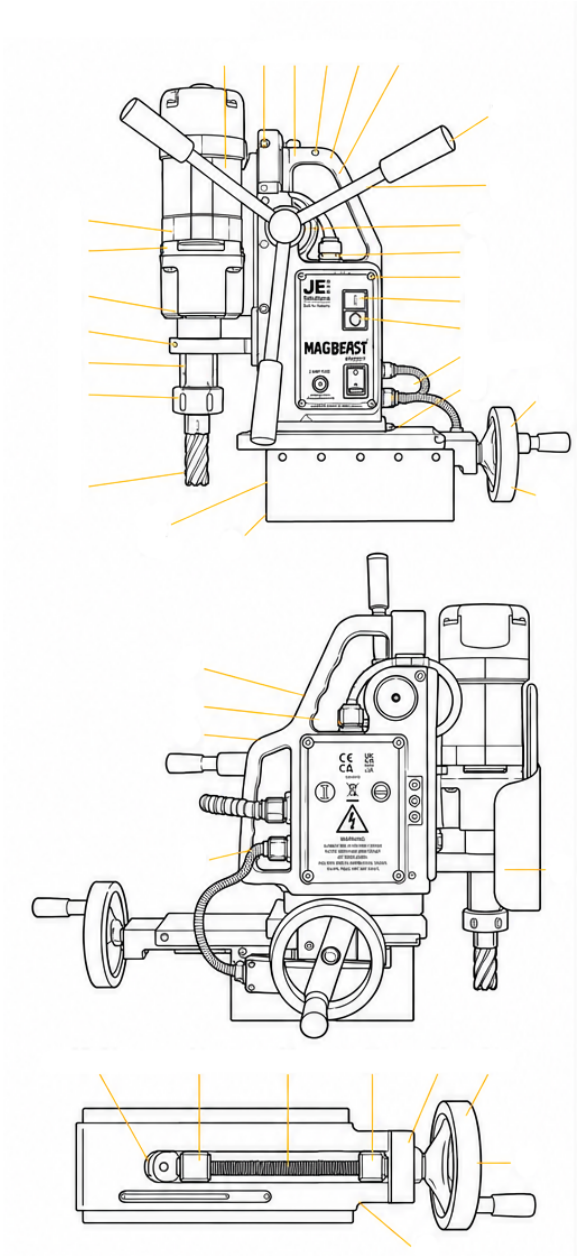

Fig. 10-1 MAGSLOT 20-XY parts diagram (item numbers match the table below)

Item	Part	Description
1	EIB01/EIB02	MHB1 Motor Unit
2	Slide	Motor Slide
3	Rail 1	Vertical Slide Rail (X2)
4	Rack 1	Rack
5	Misc	M65 X 16 Button Head
6	Casting 1	Main Body Casting
7	Knob 1	M12 Knock On Knob

Item	Part	Description
8	Handle2	M12 Small Handle
9	Elec033	Motor Cable
10	Gland1	M16 Dome Gland
11	Splate1	Switch Plate
12	Misc	6 X 3/8 Ponzi Pan S/T Screw
13	Elec017	Motor Switch with Contact Block
14	Elec008	Fuse Holder
14A	Elec020	2A Fuse
15	Elec 002	Magnet Switch
16	Gland3	M16 Strain Relief Gland
17	Slide5	Horizontal Slide
18	Wheel1	100mm Spoke Hand Wheel
19	Mag9	Magbase
20	Misc	M5 Nyloc
20A	Misc	M5X16 Socket Set Screw
21	Rail7	Horizontal Slide Rail (X2)
22	ER32 Nut	ER32 Collet Nut
23	ARB06	Single Axis Milling Machine Arbor
24	Nose1	Motor Nose Bracket
25	Pinion1	Pinion
26	Brush3	Pinion Brush (X2)
27	Elec021	No.5 P-Clip - 9.5mm
28	Clamp3	ADJ Clamping Handle
29	Bplate2	Back Plate
30	Endcap1	Pinion End Cap
31	Bearing4	Thrust Bearing - 51100 X 2
31	Misc	M6 X 12 Cap Head
32	Bearing3	61800 2RS Bearing
32	Misc	PCB - Not Shown
33	Leadscrew Miller	Steel Leadscrew
34	Nut-miller	12X2 Steel Nut RH
35	Misc	M8 Nyloc
36	Misc	M8 Washer
37	Bearing 2	6904 2RS Bearing - Motor

11 END MILL PART LIST

Selecting the correct end mill for your application will deliver the best performance, tool life and finish.

11.1 HSS Standard - General Purpose



Suited to: mild steel, structural steel, fabrication and general engineering.

Part Number	End Mill Description
JEIEM-10MM	HSS STD, 10MM
JEIEM-12MM	HSS STD, 12MM
JEIEM-14MM	HSS STD, 14MM
JEIEM-16MM	HSS STD, 16MM
JEIEM-18MM	HSS STD, 18MM
JEIEM-20MM	HSS STD, 20MM

11.2 Cobalt (CO8) - High Performance



Suited to: longer life, fabrication, harder materials and general engineering.

Part Number	End Mill Description
JEIEM-3MM/C	CO8 COBALT STD, 3MM
JEIEM-4MM/C	CO8 COBALT STD, 4MM
JEIEM-5MM/C	CO8 COBALT STD, 5MM
JEIEM-6MM/C	CO8 COBALT STD, 6MM
JEIEM-8MM/C	CO8 COBALT STD, 8MM
JEIEM-10MM/C	CO8 COBALT STD, 10MM
JEIEM-12MM/C	CO8 COBALT STD, 12MM

Need an end mill that is not listed? Contact ITM Tools on 07 3287 1114 or sales@itmtools.com.au for assistance.



Products imported and distributed nationally by ITM Tools

11 Eastern Service Road, Stapylton QLD 4207
T: 07 3287 1114 | E: sales@itmtools.com.au

www.itmtools.com.au