MAGSLOT 20X

MAGNETIC MILLING MACHINE

USER MANUAL **Model: HMMS-20X**

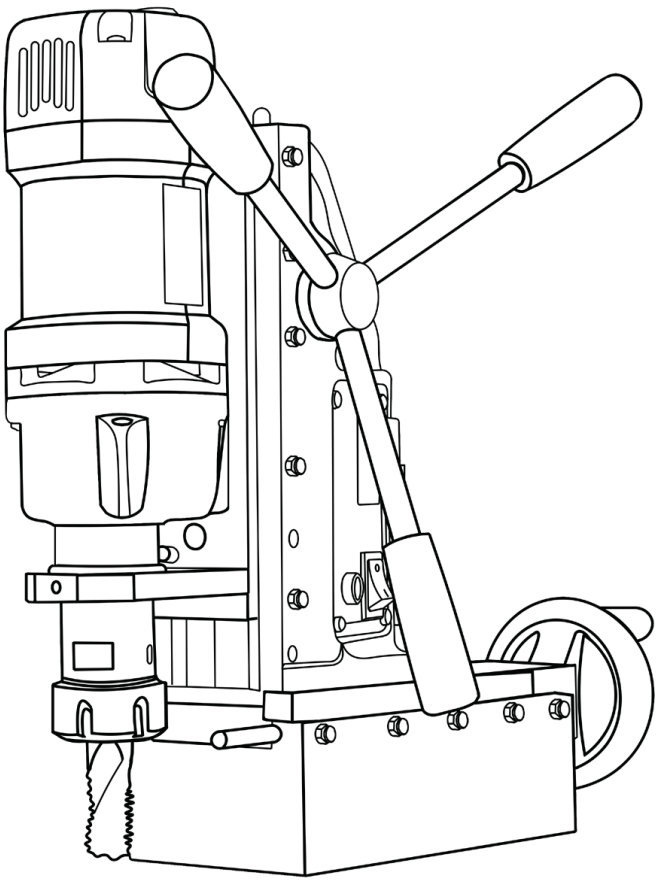

TO PREVENT SERIOUS INJURY OR DAMAGE TO YOUR MACHINE, READ AND UNDERSTAND ALL WARNINGS AND INSTRUCTIONS BEFORE USE

Ver: 1.0

LIMITED WARRANTY

Vaneega Pty Ltd t/as ITM Tools (ITM Tools) will, within twelve (12) months from the original date of purchase, repair or replace any goods found to be defective in materials or workmanship.

This warranty is void if the item has been damaged by accident, neglect, improper service or other causes not arising out of defects in materials or workmanship. This warranty does not apply to machines and/or components which have been altered, changed, or modified in any way, or subjected to overloading or use beyond recommended capacities and specifications. Worn componentry due to normal wear and tear is not a warranty claim. Goods returned defective shall be returned prepaid freight to ITM Tools or an agreed repair agent, which shall be the buyer's sole and exclusive remedy for defective goods. ITM Tools accepts no additional liability pursuant to this guarantee for the costs of travelling or transportation of the product or parts to and from ITM Tools or the service agent or dealer; such costs are not included in this warranty.

Our goods come with guarantees which cannot be excluded under the Australian Consumer Law. You are entitled to a replacement or refund for a major failure and to compensation for other reasonably foreseeable loss or damage. You are also entitled to have the goods repaired or replaced if the goods fail to be of acceptable quality and the failure does not amount to a major failure.

THE MANUFACTURER RESERVES THE RIGHT TO MAKE IMPROVEMENTS AND MODIFICATIONS TO DESIGN WITHOUT PRIOR NOTICE.

PRODUCTS IMPORTED AND DISTRIBUTED NATIONALLY BY ITM TOOLS
11 Eastern Service Road, Stapylton QLD 4207
T: 07 3287 1114 | E: sales@itmtools.com.au | W: www.itmtools.com.au

ITM TOOLS
11 Eastern Service Road, Stapylton QLD 4207
T: 07 3287 1114 | E: sales@itmtools.com.au
www.itmtools.com.au

CONTENTS

MAGSLOT 20X Magnetic Milling Machine User Manual

LIMITED WARRANTY 1

1 GENERAL INFORMATION 3

2 GENERAL SAFETY ADVICE 4

2.1 The Milling Machine Must Not Be Used When 4

2.2 Before Using the Machine 4

3 STANDARD EQUIPMENT 6

4 START UP AND OPERATION 8

4.1 Cutters and Optional Equipment Features 8

4.2 Before You Cut 9

4.3 Operating the Machine 10

5 MAINTENANCE AND SERVICE 12

6 ELECTRICAL DIAGRAM 13

7 MOTOR DIAGRAM 14

7.1 Motor Diagram Parts List 15

8 TECHNICAL DATA 16

9 PARTS LIST 17

10 END MILL PART LIST 19

10.1 HSS Standard 19

10.2 Cobalt (CO8) 19

1 GENERAL INFORMATION

WARNING

1. Before you start working with the machine, please read these instructions carefully. Take special note of the safety recommendations.
2. Please read and save these instructions for future reference.

Thank you for purchasing your **MAGSLOT 20X** portable milling machine.

This machine is designed for applications which require a slot or elongated hole in a steel plate.

Its electromagnetic base makes the machine portable and ideal for site use, however, safety precautions must be observed to ensure correct operation.

Furthermore, this machine achieves the best results with optimal tooling.

Milling cutters are designed and manufactured specifically for use and with precision, not otherwise attainable without heavy stationary equipment.

The **MAGSLOT 20X** machine is capable of milling 20 mm wide slots at a length of 90 mm in steel plate, which is unique for an electromagnetic drill of this size and weight.

PLEASE NOTE
The slot must be created from a pre-drilled or existing hole.

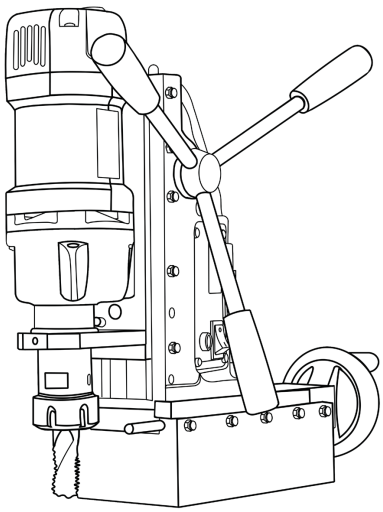

Fig. 1-1 MAGSLOT 20X magnetic milling machine

2 GENERAL SAFETY ADVICE

2.1 The Milling Machine Must Not Be Used When

1. The operator has not read the User Manual.
2. The planned work does not align with the recommendations outlined in the User Manual.
3. The machine is either incomplete or has been repaired using non-original parts.
4. Power supply parameters do not conform to those stated on the motor's plate.
5. The operator neglected to inspect the milling machine, power cable, control panel and end mill cutter.
6. The power supply socket lacks a necessary protection circuit.
7. The machine is not secured with a safety chain, leaving it vulnerable to falling, particularly when used at height or in a vertical/inverted orientation.
8. Individuals are present in close proximity to the operating machine.

2.2 Before Using the Machine

1. Inspect the electrical components, including the power cord and plug, to ensure they are in good condition.
2. The machine must be connected to a grounded electrical installation and protected by a 16 A fuse for 220 V or a 32 A fuse for 120 V. When used on construction sites, it should be powered through a separation transformer rated for Class II protection.
3. While the machine can be used outdoors, it is not weatherproof. Avoid exposing it to rain, snow or frost.
4. Do not operate the machine on rusty surfaces, steel plates with thick paint, uneven surfaces, or near welding equipment.
5. Always use a safety chain, ensuring it is securely wrapped around the anchoring element to prevent it from becoming loose. Secure the safety chain to the drill through the handle.

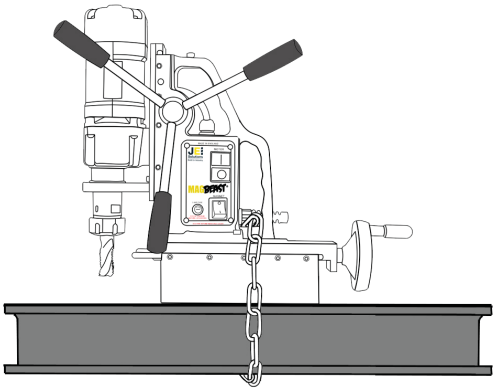

Fig. 2-1 Safety chain secured through the handle and around the anchoring element

6. Do not use the machine in explosive or hazardous environments.
7. Do not start work if the machine has excessive play or looseness in the guide slides.
8. Always wear safety goggles and ear protection when operating the machine.
9. Do not remove metal chips or debris with bare hands.
10. Do not touch the spindle or cutter during operation.
11. Ensure all tools are firmly fastened before use. When a milling cutter is used, check that the collet is secured before starting work.
12. Do not use blunt or damaged tools.
13. Use only the tools recommended in this User Manual.

14. After use, always clean the machine of metal chips and coolant.
15. Always unplug the machine from the power supply during any work on the machine.
16. Before each use, inspect the machine for damage and ensure all parts are properly fastened and in good working condition.
17. Maintain the machine according to the recommended conditions for optimal performance.
18. If the machine is dropped, submerged in liquid, or subjected to any other event that could affect its technical state, cease operation immediately. Send the machine for professional inspection and service as soon as possible.

WARNING

1. Exercise caution when machining plates less than 10 mm (0.4″) thick, as adhesion force decreases significantly with reduced material thickness. Ensure the entire machine base surface adheres firmly to the workpiece. Prior to positioning the MAGSLOT 20X, clean the work surface using coarse-grit sandpaper.
2. Do not touch or replace the tool with the power source on, or while the electromagnetic base is being used.
3. The slot must be created from a pre-drilled or existing hole.
4. Please follow all recommendations.

3 STANDARD EQUIPMENT

The **MAGSLOT 20X** comes in a standard equipment set which consists of:

No.	Item	Quantity
1	Robust Plastic Carry Case	1 piece
2	Slotting Machine	1 piece
3	Coolant Bottle	1 piece
4	Spanner for ER32 Collet	1 piece
5	Locking Key for Collet	1 piece
6	Set of Collets ER32 3 mm – 20 mm	1 piece
7	Allen Keys	2 pieces
8	Spoke Handles	3 pieces
9	Safety Chain with Snap Hook	1 piece
10	User Manual	1 piece
11	Cutter Adaptor (optional extra)	Not included

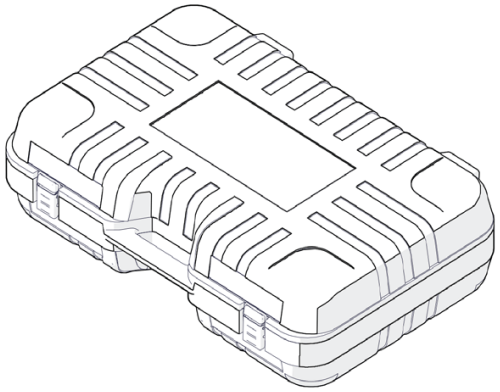

Fig. 3-1 Item 1: carry case

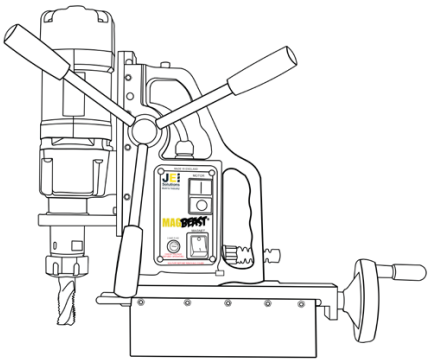

Fig. 3-2 Item 2: slotting machine

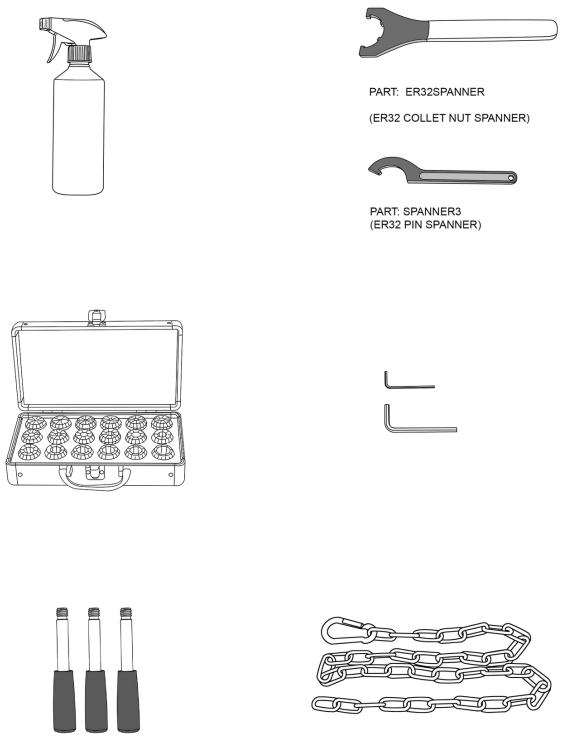

Fig. 3-3 Items 3 to 9

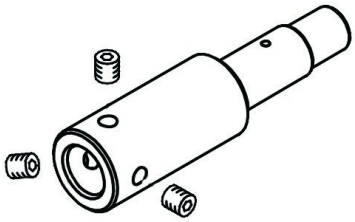

Fig. 3-4 Item 11: cutter adaptor (optional extra)

4 START UP AND OPERATION

4.1 Cutters and Optional Equipment Features

This milling machine is equipped with an ER32 collet chuck (Fig. 4-1) designed for use with milling cutters.

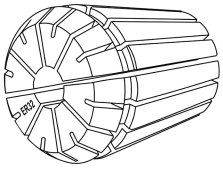

Fig. 4-1 ER32 collet

To use the collet chuck, first select a collet size that matches the diameter of your milling cutter. Screw the collet firmly into the chuck until it is fully seated.

Next, select a collet with a shank size that matches your milling tool, and insert the tool and collet together into the chuck (Fig. 4-2).

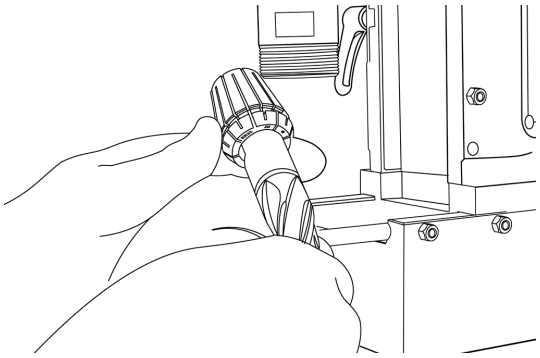

Fig. 4-2 Inserting the milling tool and collet into the chuck

Insert the collet and end mill into the machine arbor, then place the securing nut over the assembly. Tighten the thread by hand until snug. Next, position the supplied spanner over the ridges on the securing nut and lock the machine arbor in place using the locking key. Finally, turn the spanner clockwise until the milling cutter is fully secured within the collet (Fig. 4-3).

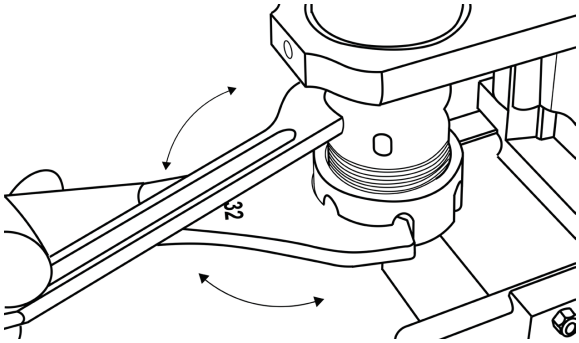

Fig. 4-3 Tightening the securing nut with the spanner and locking key

To securely install the milling cutter, insert it and then use the supplied spanner and locking key to tighten the tool firmly in place (Fig. 4-4).

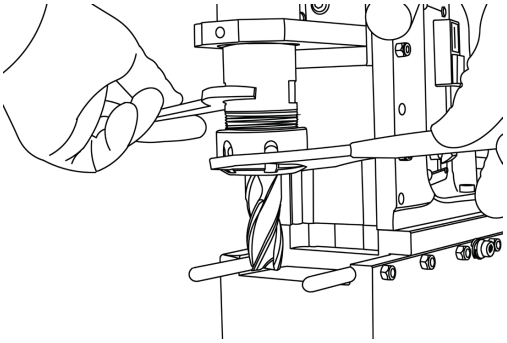

Fig. 4-4 Milling cutter installed and secured

4.2 Before You Cut

Before positioning the machine on the workpiece, always ensure the following:

- The workpiece is made of steel.
- The workpiece thickness is at least 3/8″ (10 mm) (Fig. 4-5).
- The surface of the steel under the magnet is flat.
- The surface where you intend to place the milling machine has been wiped, brushed or sanded down to remove any rust, paint, dirt or other contaminants that could reduce the adhesive power of the electromagnetic base.

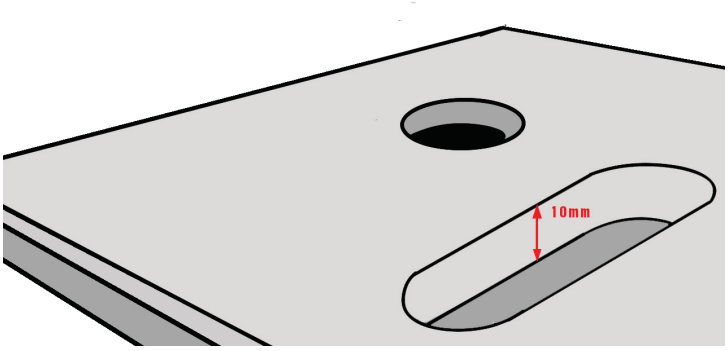

Fig. 4-5 Minimum plate thickness 10 mm

Next, install the milling cutter, or other tooling, into the machine before plugging it into the mains. Then plug it in and position it where you wish to use it (Fig. 4-6).

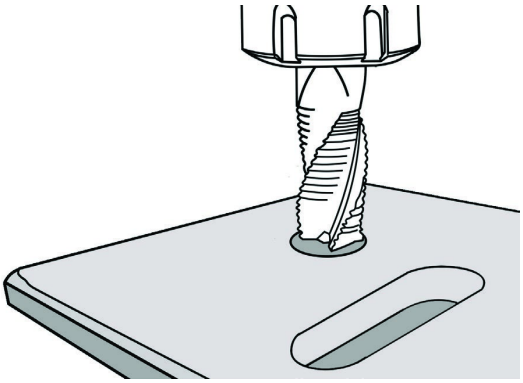

Fig. 4-6 Positioning the milling cutter over an existing hole

Finally, place the machine so that the tool is over the centre of an existing hole you intend to elongate, and turn the magnetic base ON (Fig. 4-7).

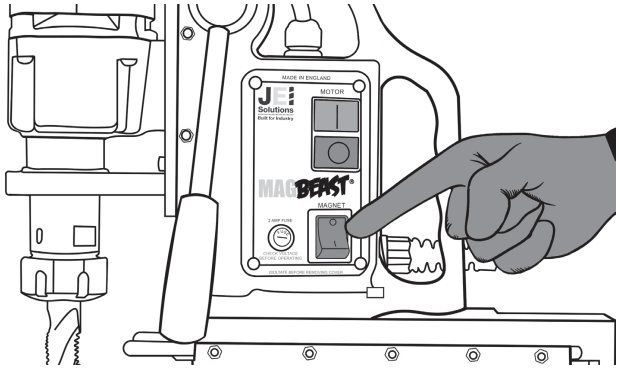

Fig. 4-7 Turning the magnetic base ON

CAUTION

1. Milling cutter installation and removal must be carried out when the machine is turned off and disconnected from the power supply.
2. READ THE WHOLE USER MANUAL BEFORE ATTEMPTING TO START UP.
3. The slot must be created from a pre-drilled or existing hole.

4.3 Operating the Machine

The numbers below refer to the numbered items in Fig. 4-8 and Fig. 4-9.

1. Rotate the handwheel (1) left or right to move the milling head and cutter (4) forward or backward, creating the desired slot.
2. Connect the machine's power cord to the power supply and press the magnet switch (2) to activate the magnetic base and secure it to the steel plate. Ensure the steel plate has a minimum thickness of 8 mm.
3. Turn the machine's spoke handles (3) clockwise to lower the milling head (4) over an existing hole. The end mill should match the diameter of the existing hole.
4. Position the milling cutter (4) no more than 6 mm below the hole surface per pass, using the measure rule (5) on the machine's frame to gauge the depth.
5. Once the milling cutter is properly positioned, secure the downward feed on the motor by tightening the bolt (6) with the 5 mm Allen key provided.
6. Start the motor by pressing the green button on the switch (7).
7. Begin milling by turning the handwheel (1) in the desired direction. For best results, apply an oil-based cutting lubricant to keep the milling cutter cool.
8. Slowly and steadily continue moving the handwheel (1) to achieve the desired slot length, using the measure rule (5) to monitor the motion.

No.	Item
1	Handwheel
2	Magnet switch
3	Spoke handles
4	Milling cutter
5	Measure rule
6	Feed lock bolt
7	Motor switch

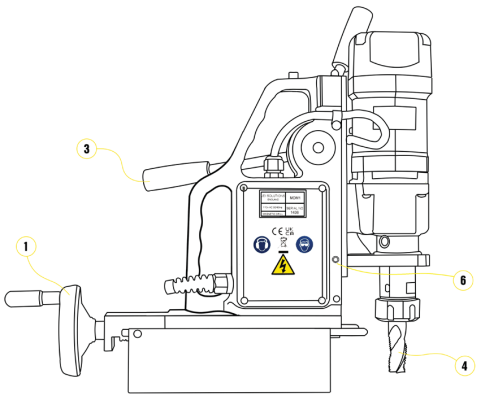

Fig. 4-8 Machine controls

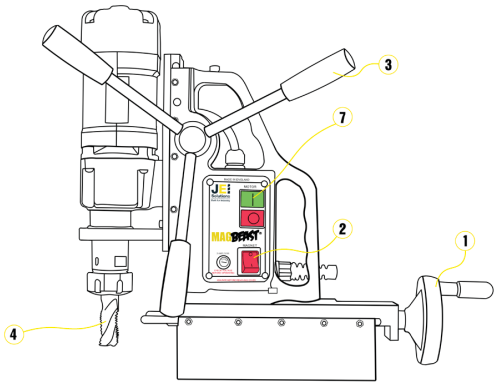

Fig. 4-9 Machine controls in use

5 MAINTENANCE AND SERVICE

To avoid accidents, regularly inspect the drill stand, power cable, wiring, plug connectors and switches for damage.

Perform adjustments to the machine's play guides every 50 hours or as necessary, using the regulation screws. The slide guide is correctly adjusted if the drive can be moved smoothly using the lever, but it should not slide down automatically under its own weight.

Every 100 hours of use, check the condition of the carbon brushes. If their length is less than 5 mm, replace them with original new ones. After replacement, run in the new brushes without load for about 20 minutes. All other repair work should be done only by authorised service points appointed by the distributor. Replacing the brushes is possible without removing the motor unit from the machine.

Regularly lubricate the brass slide guide inserts, as well as the rack and pinion, with grease.

To prevent the machine from rusting, especially when used outdoors, all steel parts should be covered with a thin layer of grease.

Damaged machine parts should only be replaced with original parts.

When ordering new spare parts, provide the code or send the damaged part along with information about the type of machine and power supply.

CAUTION

In the case that the machine falls on a hard surface, from a height, is wet or is subjected to other unfortunate events that could affect its technical state, work should be terminated immediately and the machine should be sent to service for inspection as soon as possible.

6 ELECTRICAL DIAGRAM

> Refer servicing and fault diagnosis to qualified electrical personnel only.

Wiring schematic for the **MAGSLOT 20X**.

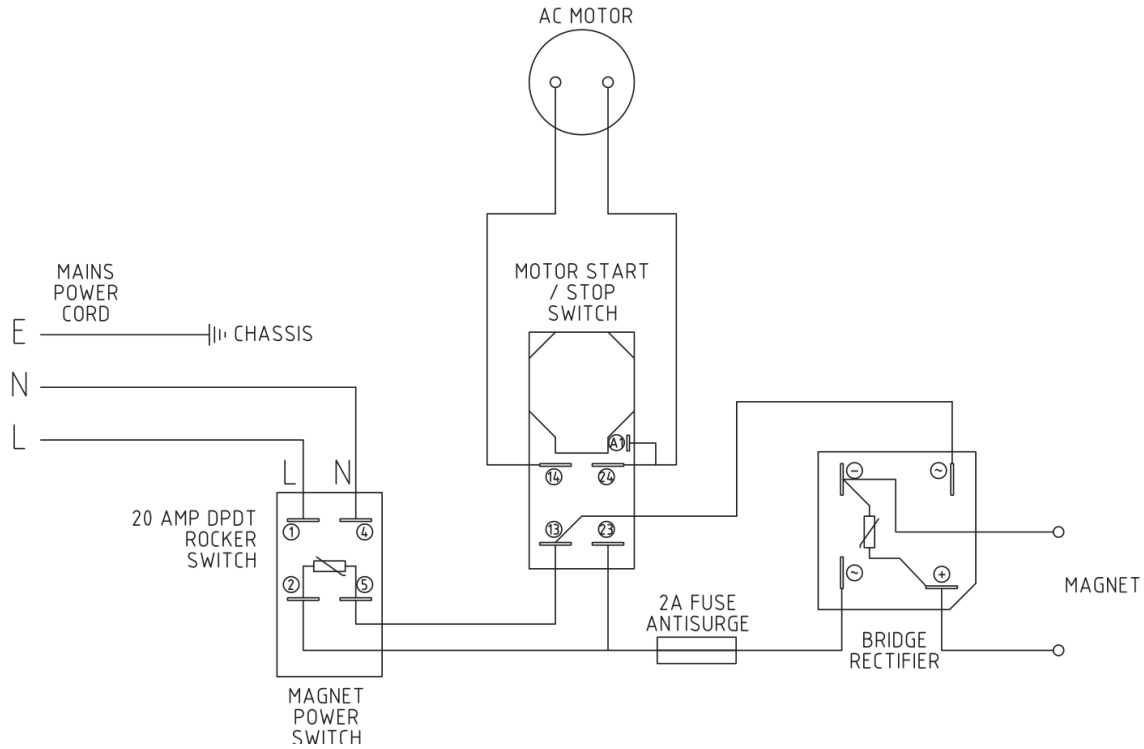

Fig. 6-1 MAGSLOT 20X wiring schematic

7 MOTOR DIAGRAM

Exploded diagram of the **MAGSLOT 20X** motor assembly and gearbox components. Refer to the parts list in section 7.1 for part names, numbers and quantities.

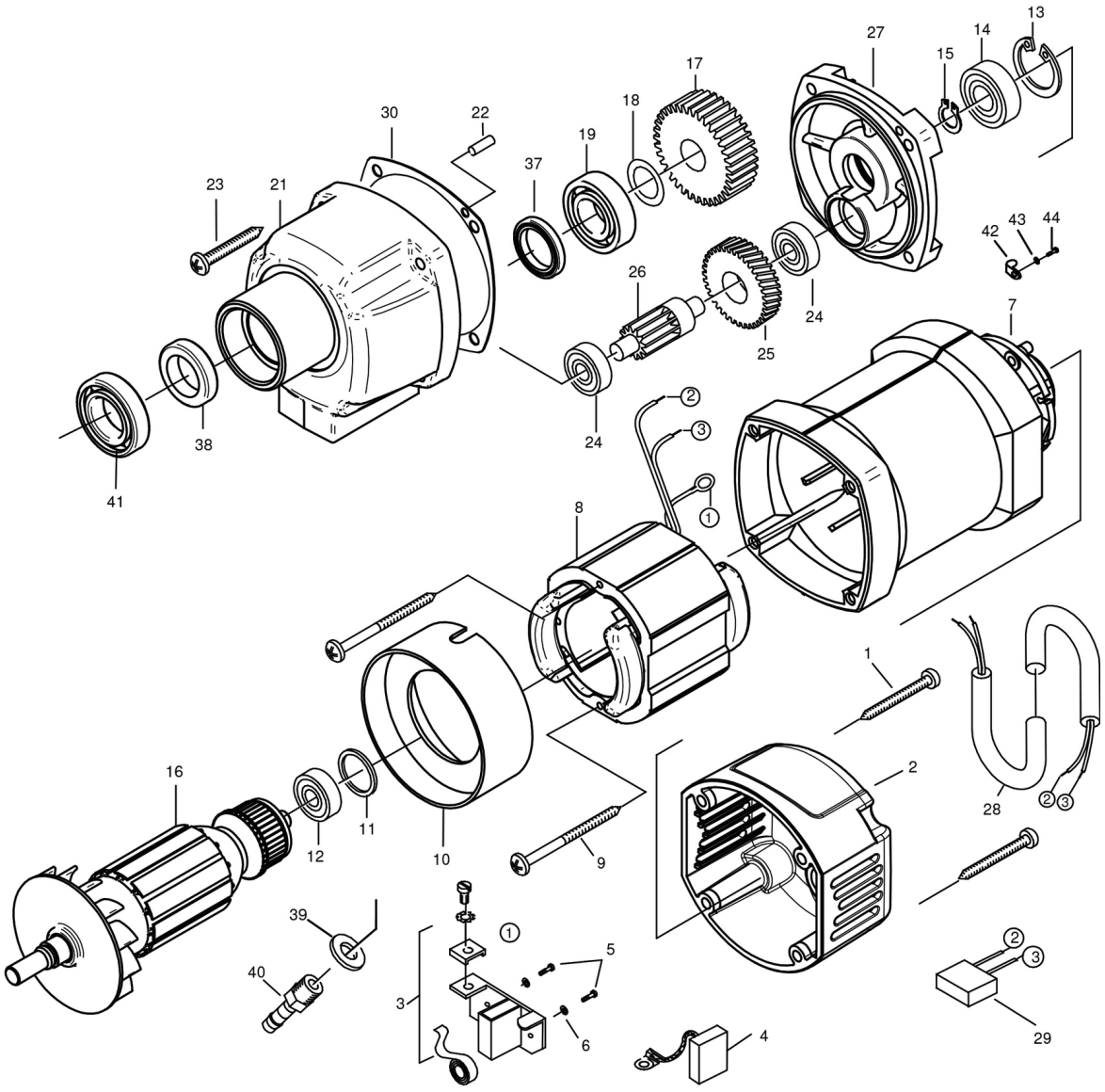

Fig. 7-1 Motor assembly and gearbox exploded diagram

7.1 Motor Diagram Parts List

No.	Description	Part Number	Pieces
1	Cap Screws HC 4, 8x50	HM40.EX-01	4
2	Motor Top Cap	HM40.EX-02	1
3	Brusholder Assembly	HM56	2
4	Carbon Brush 6,3,10x18	HM57	2
5	Brusholder Mount Screw ZM4x12	HM111	4
6	Washer	HM109	4
7	Motor Housing	HM40.EX-07	1
8	Field Coil	HM40.EX08	1
9	Screw	HM543	2
10	Fan Ring	E55611	1
11	O-Ring 22x2.5	HM512	1
12	Bearing 608 2Z	HM40.EX-12	1
13	Circlip/Locking Ring 28/1.2	HM121	1
14	Bearing 6001 2Z	HM40.EX-14	1
15	Circlip	E55633EX	1
16	Armature	HM40.EX16	1
17	Spindle Gear	HM40.EX-17	1
18	Shim Washer	HM40.EX-18	1
19	Bearing 6003 2RS	HM40.EX-19	1
20	Spindle: Weldon 19mm	HM40.EX-20	1
21	Gearbox Housing	HM40.EX-21	1
22	Dowel Pin 4x12	HM511	1
23	Screw HC 4.8x38	HM541T	4
24	Bearing 608	HM40.EX-24	2
25	Gear	HM40.EX-25	1
26	Gear Shaft	HM40.EX-26	1
27	Back Plate HM40/HM50	HM50BP	1
28	Cable Flex	HM40.EX-28	1
29	Suppressor	HM113	1
30	Gasket	HM40.EX-30	1
31	Spring 1x9x107	HM40.EX-31	1
32	Piston	HM40.EX-32	1
33	Circlip/Gearbox Gasket	HM40.EX-33	1
34	O-Ring	HM40.EX-34	1
35	Washer	HM40.EX-35	1
36	Secure Screw	HM40.EX-36	3
37	Seal D20/28/4	HM40.EX-37	1
38	Seal D20/30/7	HM40.EX-38	1
39	Washer 1/8"	HM40.EX-39	1
40	Hose Tail 1/8"	HM40.EX-40	1
41	Bearing 6904 2RS	HM40.EX-41	1

8 TECHNICAL DATA

Specification	Value
Power supply	110-120 V 50/60 Hz~ / 220-240 V 50/60 Hz~
Power required	1100 W
Motor power	1020 W
Tool holder	3/4″ Weldon (19.05 mm)
Max. milling cutter diameter	40 mm
Max. drilling diameter	16 mm
Max. milling depth	2″ (51 mm)
Minimum workpiece thickness	6 mm
Insulation class	I
Standard adhesive force of electromagnet	9800 N
Slide stroke	124 mm
Machine speed (under load)	440 rpm
Electromagnetic base	84 x 168 x 41.5 mm
Length of the power cord	3.0 m
Total weight	12.7 kg
Noise level	above 85 dB
Surrounding temperature	0°C – 40°C

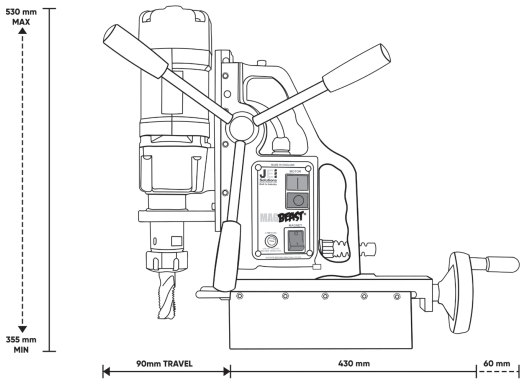

Fig. 8-1 Front dimensions

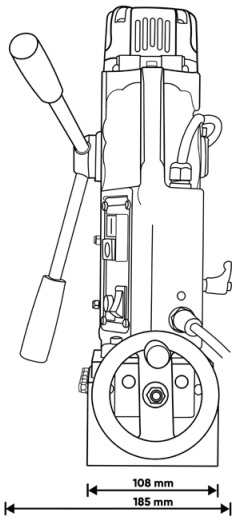

Fig. 8-2 Side dimensions

9 PARTS LIST

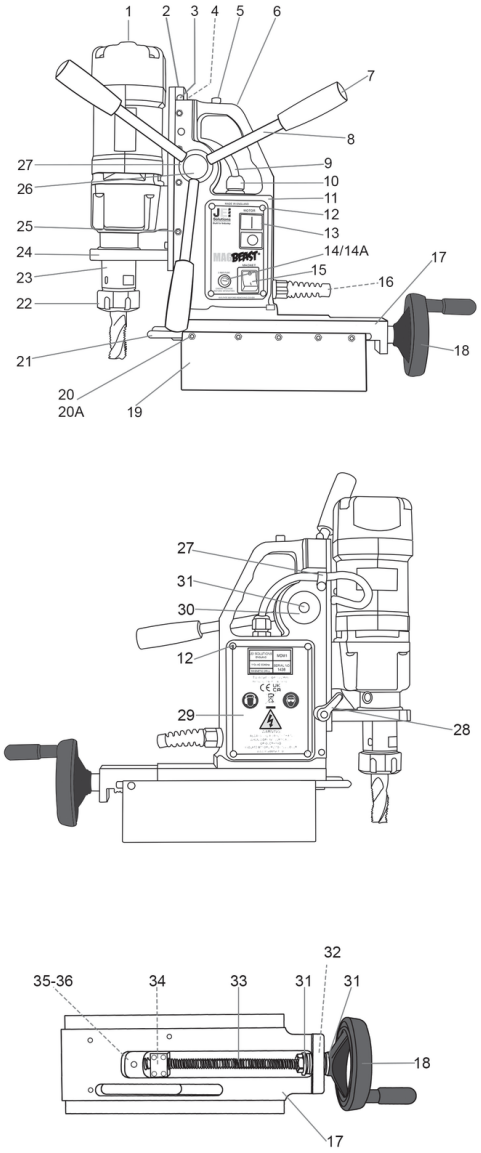

Fig. 9-1 MAGSLOT 20X parts diagram (item numbers match the table below)

Item	Part	Description
1	EIB01/EIB02	MHB1 Motor Unit
2	Slide	Motor Slide
3	Rail 1	Vertical Slide Rail (X2)
4	Rack 1	Rack
5	Misc	M65 X 16 Button Head
6	Casting 1	Main Body Casting

Item	Part	Description
7	Knob 1	M12 Knock On Knob
8	Handle2	M12 Small Handle
9	Elec033	Motor Cable
10	Gland1	M16 Dome Gland
11	Splate1	Switch Plate
12	Misc	6 X 3/8 Ponzi Pan S/T Screw
13	Elec017	Motor Switch with Contact Block
14	Elec008	Fuse Holder
14A	Elec020	2A Fuse
15	Elec 002	Magnet Switch
16	Gland3	M16 Strain Relief Gland
17	Slide5	Horizontal Slide
18	Wheel1	100mm Spoke Hand Wheel
19	Mag9	Magbase
20	Misc	M5 Nyloc
20A	Misc	M5X16 Socket Set Screw
21	Rail7	Horizontal Slide Rail (X2)
22	ER32 Nut	ER32 Collet Nut
23	ARB06	Single Axis Milling Machine Arbor
24	Nose1	Motor Nose Bracket
25	Pinion1	Pinion
26	Brush3	Pinion Brush (X2)
27	Elec021	No.5 P-Clip - 9.5mm
28	Clamp3	ADJ Clamping Handle
29	Bplate2	Back Plate
30	Endcap1	Pinion End Cap
31	Bearing4	Thrust Bearing - 51100 X 2
31	Misc	M6 X 12 Cap Head
32	Bearing3	61800 2RS Bearing
32	Misc	PCB - Not Shown
33	Leadscrew Miller	Steel Leadscrew
34	Nut-miller	12X2 Steel Nut RH
35	Misc	M8 Nyloc
36	Misc	M8 Washer
37	Bearing 2	6904 2RS Bearing - Motor

10 END MILL PART LIST

Selecting the correct end mill for your application will deliver the best performance, tool life and finish.

10.1 HSS Standard

Part Number	End Mill Description
JEIEM-10MM	HSS STD, 10MM
JEIEM-12MM	HSS STD, 12MM
JEIEM-14MM	HSS STD, 14MM
JEIEM-16MM	HSS STD, 16MM
JEIEM-18MM	HSS STD, 18MM
JEIEM-20MM	HSS STD, 20MM

10.2 Cobalt (CO8)

Part Number	End Mill Description
JEIEM-3MM/C	CO8 COBALT STD, 3MM
JEIEM-4MM/C	CO8 COBALT STD, 4MM
JEIEM-5MM/C	CO8 COBALT STD, 5MM
JEIEM-6MM/C	CO8 COBALT STD, 6MM
JEIEM-8MM/C	CO8 COBALT STD, 8MM
JEIEM-10MM/C	CO8 COBALT STD, 10MM
JEIEM-12MM/C	CO8 COBALT STD, 12MM

Need an end mill that is not listed? Contact ITM Tools on 07 3287 1114 or sales@itmtools.com.au for assistance.



Products imported and distributed nationally by ITM Tools

11 Eastern Service Road, Stapylton QLD 4207
T: 07 3287 1114 | E: sales@itmtools.com.au

www.itmtools.com.au