Serenity Wall Basin Set 160/185/220mm Spout

Nero

Lead Free

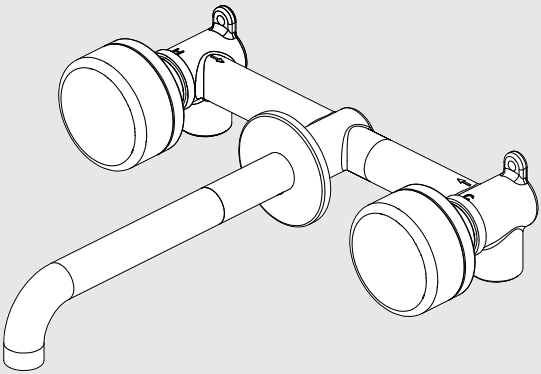

Versions:202506

Drawing

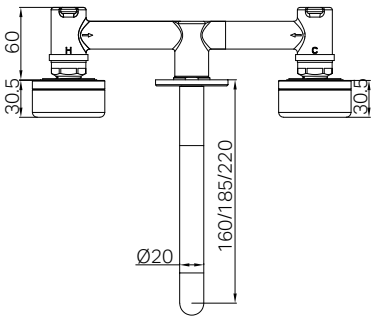

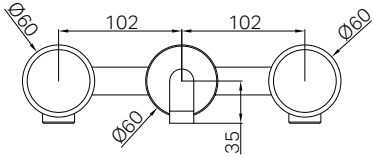

Specifications

Watermark License
WM-060073

Temperature Rating
Min 1˚C-Max 75˚C

Pressure Rating
Min 150kpa - Max 500kpa

Group Item

1 x Serenity Wall Basin Set Body Only, SKU:24C020
1 x Serenity Wall Basin Set 160/185/220mm Spout
Trim Kits Only

*This product is packaged separately.

*Dimensions are nominal measurements only
**Includes an additional non-restricting aerator for bath use

Chrome

Gun Metal

Brushed Bronze

Matte Black

Brushed Gold

Brushed Nickel

Serenity Wall Basin Set 160mm Spout With Carrara Handle
24D035BZ/ 24D035BG / 24D035BN/24D035GM / 24D035MB / 24D035CH
Serenity Wall Basin Set 160mm Spout With Verde Alpi Handle
24D036BZ/ 24D036BG / 24D036BN/24D036GM / 24D036MB / 24D036CH
Serenity Wall Basin Set 160mm Spout With Rome Travertine Handle
24D037BZ/ 24D037BG / 24D037BN/24D037GM / 24D037MB / 24D037CH
Serenity Wall Basin Set 160mm Spout With Arabescato Corchia Handle
24D038BZ/ 24D038BG / 24D038BN/24D038GM / 24D038MB / 24D038CH
Serenity Wall Basin Set 160mm Spout With Metal Handle
24D040BZ/ 24D040BG / 24D040BN/24D040GM / 24D040MB / 24D040CH
Serenity Wall Basin Set 160mm Spout With Marquina Black Handle
24D121BZ/ 24D121BG / 24D121BN/24D121GM / 24D121MB / 24D121CH

Serenity Wall Basin Set 185mm Spout With Carrara Handle
24D041BZ/ 24D041BG / 24D041BN/24D041GM / 24D041MB / 24D041CH
Serenity Wall Basin Set 185mm Spout With Verde Alpi Handle
24D042BZ/ 24D042BG / 24D042BN/24D042GM / 24D042MB / 24D042CH
Serenity Wall Basin Set 185mm Spout With Rome Travertine Handle
24D043BZ/ 24D043BG / 24D043BN/24D043GM / 24D043MB / 24D043CH
Serenity Wall Basin Set 185mm Spout With Arabescato Corchia Handle
24D044BZ/ 24D044BG / 24D044BN/24D044GM / 24D044MB / 24D044CH
Serenity Wall Basin Set 185mm Spout With Metal Handle
24D046BZ/ 24D046BG / 24D046BN/24D046GM / 24D046MB / 24D046CH
Serenity Wall Basin Set 185mm Spout With Marquina Black Handle
24D122BZ/ 24D122BG / 24D122BN/24D122GM / 24D122MB / 24D122CH

Serenity Wall Basin Set 220mm Spout With Carrara Handle

24D047BZ/ 24D047BG / 24D047BN/24D047GM / 24D047MB / 24D047CH

Serenity Wall Basin Set 220mm Spout With Verde Alpi Handle

24D048BZ/ 24D048BG / 24D048BN/24D048GM / 24D048MB / 24D048CH

Serenity Wall Basin Set 220mm Spout With Rome Travertine Handle

24D049BZ/ 24D049BG / 24D049BN/24D049GM / 24D049MB / 24D049CH

Serenity Wall Basin Set 220mm Spout With Arabescato Corchia Handle

24D050BZ/ 24D050BG / 24D050BN/24D050GM / 24D050MB / 24D050CH

Serenity Wall Basin Set 220mm Spout With Metal Handle

24D052BZ/ 24D052BG / 24D052BN/24D052GM / 24D052MB / 24D052CH

Serenity Wall Basin Set 220mm Spout With Marquina Black Handle

24D123BZ/ 24D123BG / 24D123BN/24D123GM / 24D123MB / 24D123CH

Installation Instruction

GENERAL INSTRUCTIONS:

- This product must be installed by a licensed plumber. Ensure that the installation complies with the Australian/New Zealand Standard AS/NZS 3500.
- All pipework must be thoroughly flushed prior to the installation of the mixer. In-line filters must be fitted on both hot and cold supplies to prevent foreign particles from damaging the ceramic cartridge.
- All outlets used primarily for personal hygiene must deliver water at a safe temperature in accordance with regional regulations.

NOTE:

- Do not hydrostatic test the installation with this mixer installed. Damage to the ceramic cartridge may occur.
- Do not remove the ceramic cartridge from the mixer when installing.
- After installation, all connections must be checked for leaks.
- This mixer is not recommended for use in uncontrolled heating systems such as wet-backs or solar heating units unless a suitable tempering valve is fitted.
- If limited water flow is experienced, locate aerator and filter washers and clean away foreign material as required.
- It is the responsibility of the plumber to ensure a waterproof seal is achieved between the product and mounting surface. If in doubt about the quality of the seal, remove the product and reinstall.
- The marble stone hand wheel crafted from natural marble. Each handle boasts unique variations in color, veining, and texture, making every piece one of a kind.

MAINTENANCE AND CARE:

- Regularly check the mixer and connections for signs of wear or leaks.
- Clean the tap with mild soapy water to maintain its appearance, avoiding harsh chemicals and abrasive materials that may damage the finish.
- Avoid contact with highly pigmented substances such as red wine, coffee and ink, as they may cause permanent staining.

FINAL INSPECTION:

- Ensure the tap operates smoothly and that there are no leaks at the connections.
- Clean the area and the newly installed tap with a soft cloth to remove any installation residues.

Installation Instruction
For Body Only

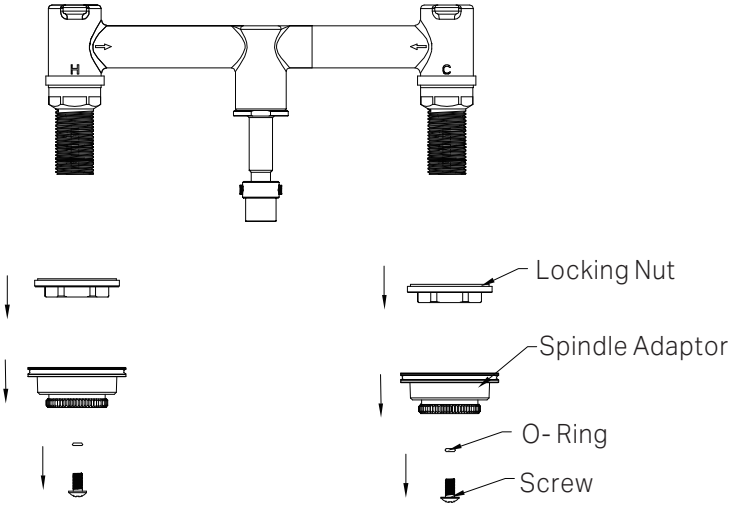

1. Remove the components from spindle as shown in the provided diagram. Ensure all parts are removed gently to avoid damage to the components or threads.

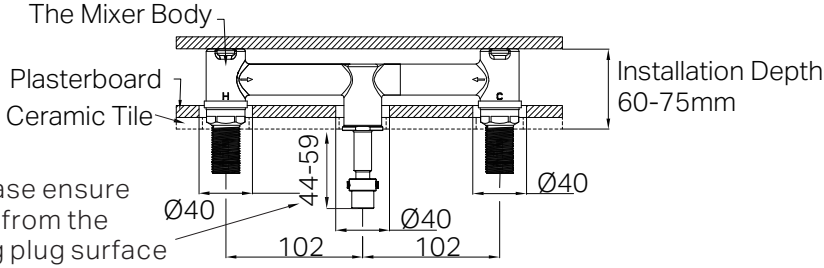

Caution: Please ensure the distance from the water testing plug surface to the tile surface is within the range of 44-59mm.

2. Position the mixer body against the nogging and secure it firmly. Ensure the installation depth is 60–75mm from the nogging to the ceramic tile.
3. Connect the cold and hot water supply lines and perform a leak test.
4. Drill three Ø40mm holes in the plasterboard as shown in the diagram.

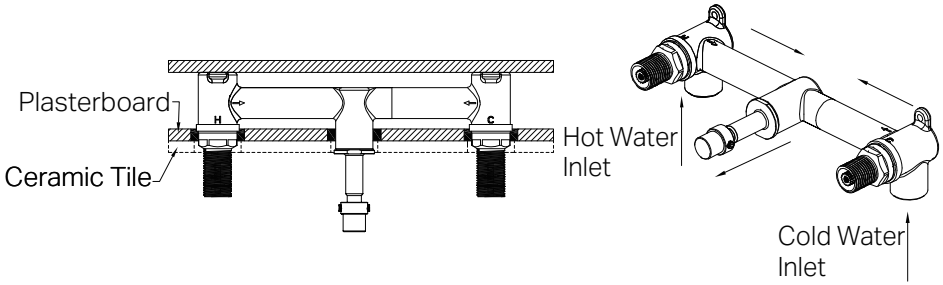

5. Install plasterboard and waterproof the gap between the mixer body and plasterboard.

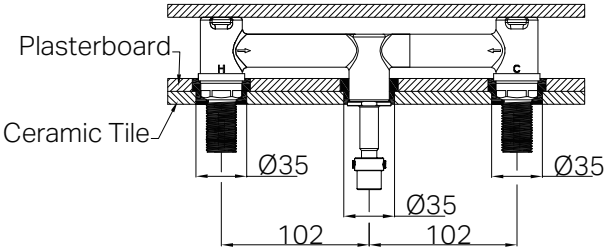

6. Drill three Ø35mm holes in the ceramic tile aligned with the plasterboard cutouts.
7. Position the ceramic tile precisely and waterproof the junction between the mixer body.

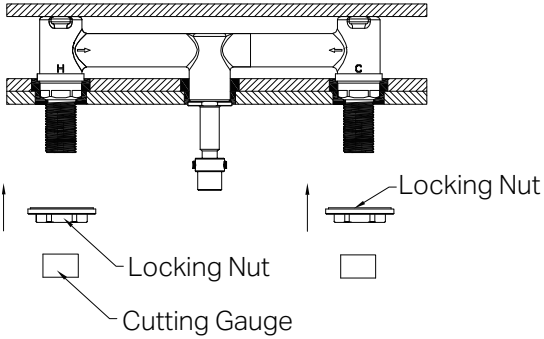

8. Reattach the locking nuts onto the spindle.
Note: Use the provided washers to achieve a secure and watertight connection.
9. Attach the cutting gauges to the spindle.

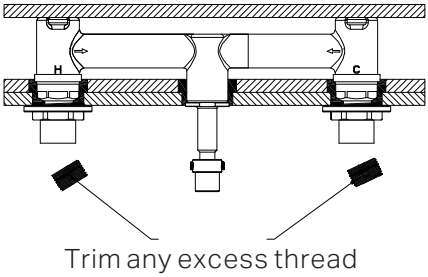

10. Trim any excess thread. Remove the cutting gauges after this step.

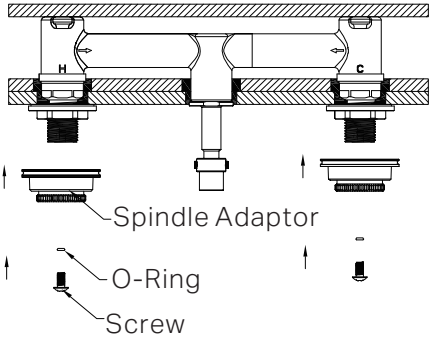

11. Install the spindle adaptors onto the spindles. Tighten the spindles securely using screws, ensuring that O-rings are properly seated.

Installation Instruction
For Trim Kits Only

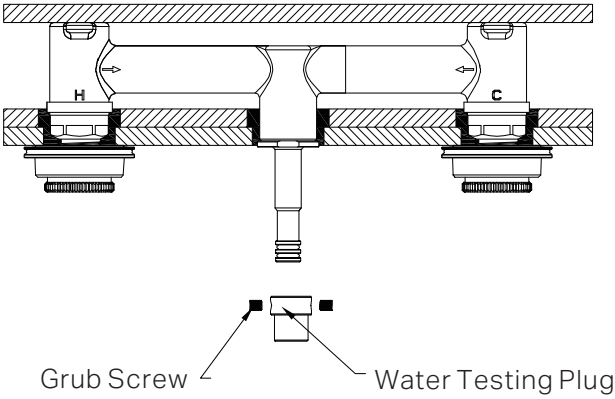

1. Release the grub screws to remove the water testing plug.

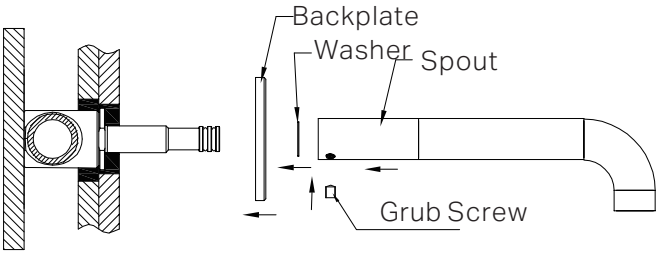

2. Slide the backplate and washer onto the wall.
Ensure the spout is aligned and secure it firmly using the supplied grub screw.

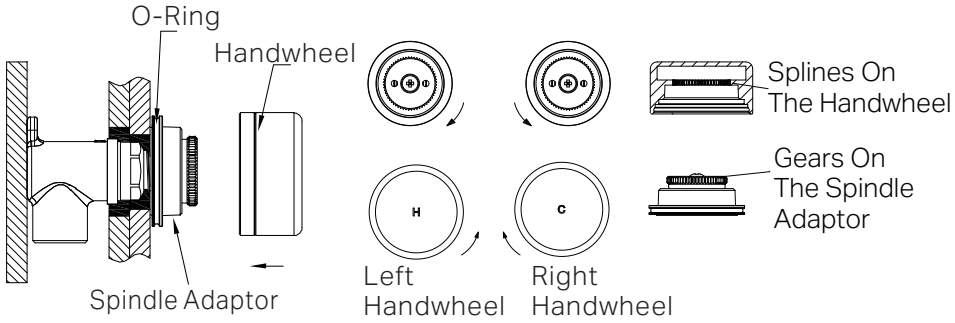

3. Apply lubrication evenly to the O-Ring. Refer to the diagram to identify the correct O-Ring position. Ensure the O-Ring is well-lubricated to prevent damage during installation.
For Metal Handwheels:
Rotate the left spindle adaptor clockwise to its fully closed position.
Rotate the right spindle adaptor counterclockwise to its fully closed position.
Refer to the diagram for clarification.
For Marble Handwheels:
No adjustment to the spindle adaptor is necessary.
Align the Handwheel with the Spindle Adaptor:
Ensure the spline on the underside of the handwheel align perfectly with the gears on the spindle adaptor, as shown in the above diagram.
This alignment is crucial for proper functionality.
Secure the Handwheel:
Once aligned, press the handwheel down firmly onto the spindle adaptor.
Tip:
For metal handwheels, ensure the handwheel marked "H" is installed on the left side and the handwheel marked "C" is installed on the right side.

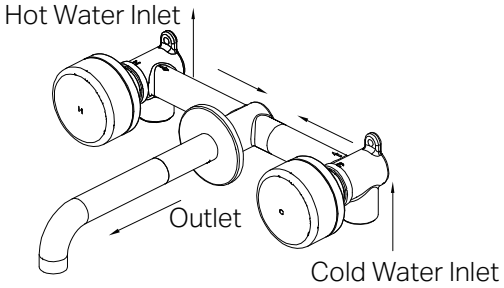

4. Turn on the drainage system and water supply, and inspect all connections for any signs of leakage.
Note: If you bought marble handwheel product, there are no hot/cold markings are applied to the handwheels.

Nero

Nero

Warranty Policy