D1303SIL Concealed Cam Action Closer

Installation Instructions

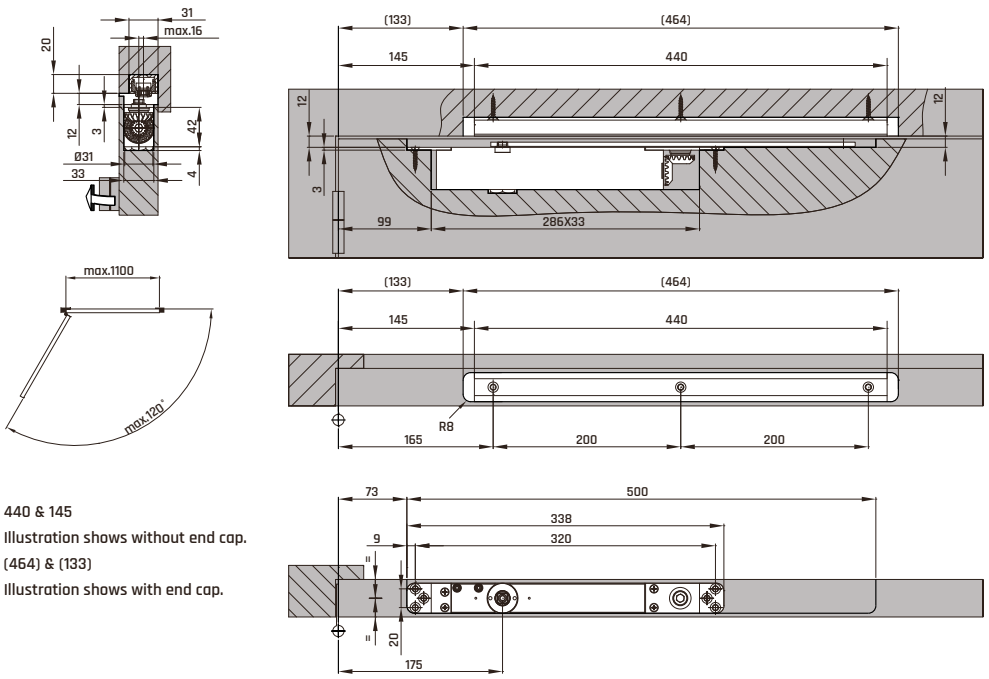

440 & 145

Illustration shows without end cap.

(464) & (133)

Illustration shows with end cap.

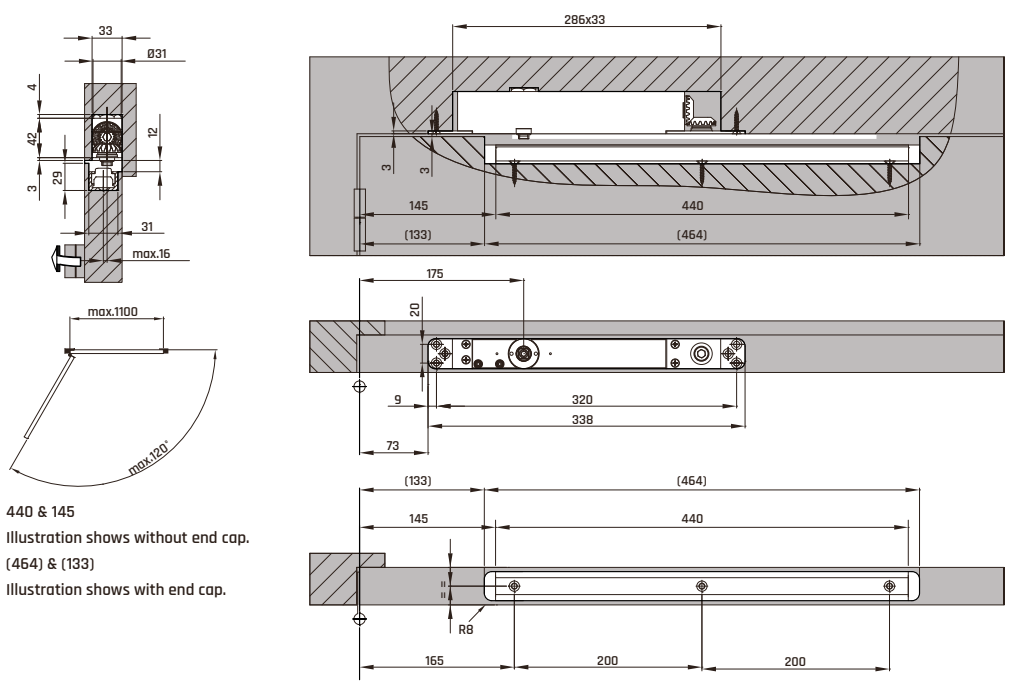

440 & 145

Illustration shows without end cap.

(464) & (133)

Illustration shows with end cap.

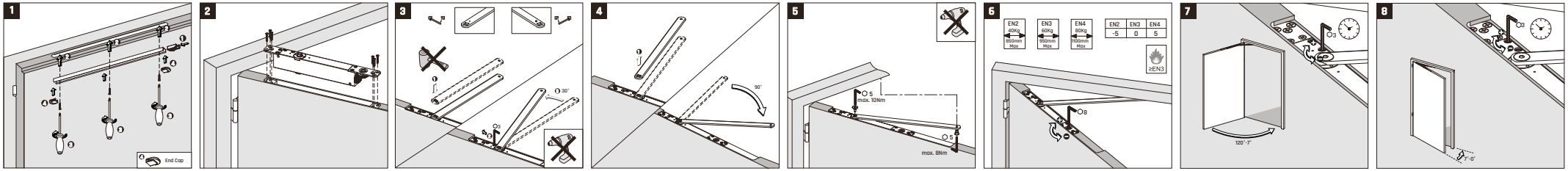

IMPORTANT INSTALLATION NOTES

After installation, please check and test

1. Open the door leaf to its maximum opening angle and release. The door leaf should close fully into the door frame and overcome the latch.
2. Open the door leaf and rest the latch bolt on the striker plate. Release the door leaf. The door closer should have sufficient power to latch the door leaf closed.
3. Back-check provides a cushioning effect when the door is forcibly thrown open but does not serve as substiture for a door stop.

Maintenance

1. Check the door closer every three months to ensure all fixings are secure and adjust,if necessary,adjust the closing and latching speed and mark the door operating both functionally and smoothly, in accordance with the expectations of BS EN 1154:1997.
2. Apply light oil to arm knuckle joint and door hinges.

Warning

1. Due to door closer power sizes 1 & 2 are NOT considered suitable for fire/smoke door assemblies. Therefore, the minimum power size allowed for fire/smoke door assemblies is power size 3.
2. The mechanical hold open devices must NOT be installed in fire/smoke door.
3. Door closer should NOT be opened beyond the max. Opening angle of the power size you selected.
4. This door closer contains a powerful spring,which is inserted into the body under pressure. Under circumstances should not attempt to dismantle the door closer.
5. The suitability of the hold-open device may be limited where the door closer is fixed in combination with outward opening doors, and also in the case of large, heavy doors.