HO (Hold Open)

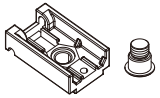

NHO (Non Hold Open)

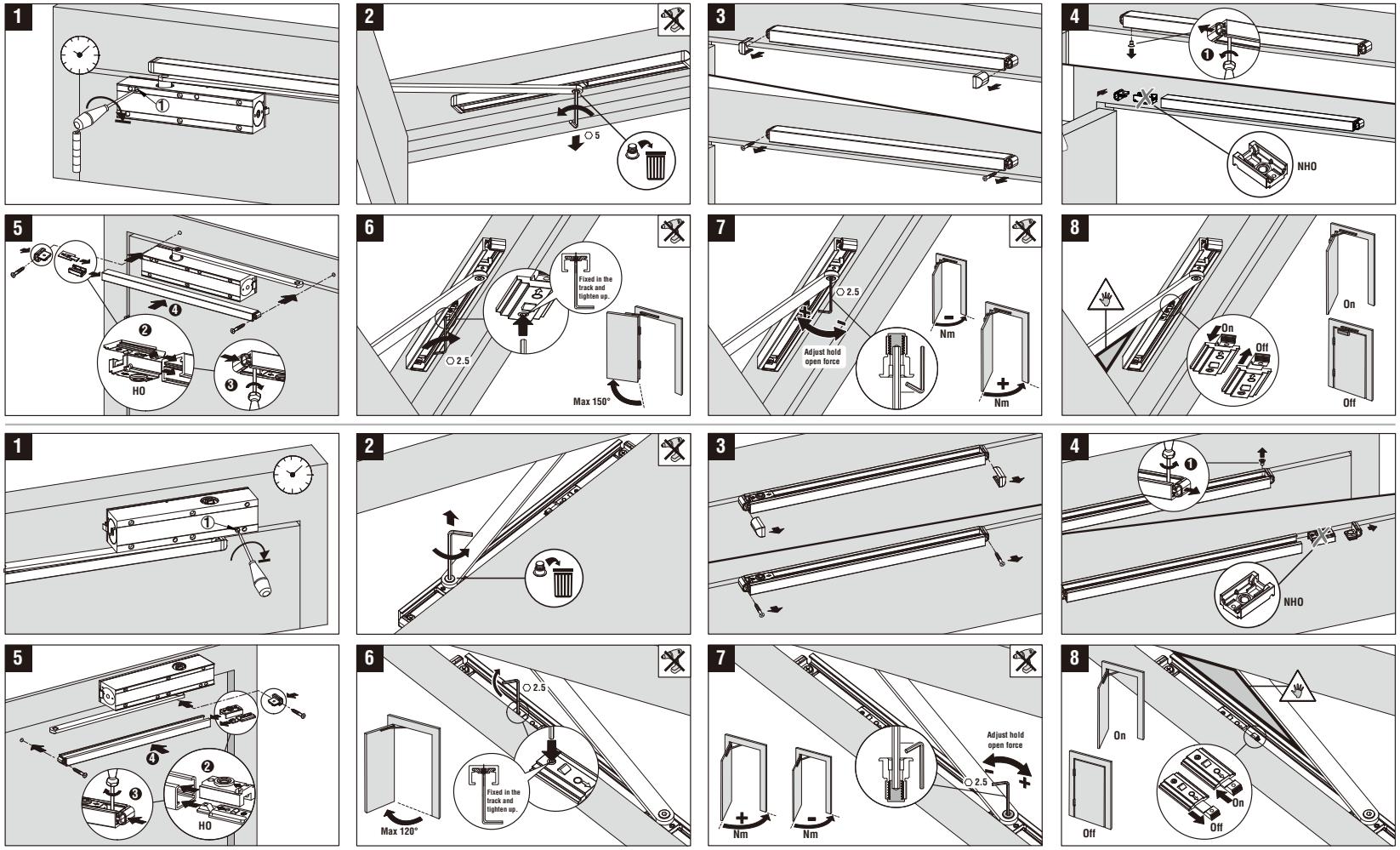

HO (Hold Open)

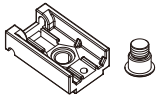
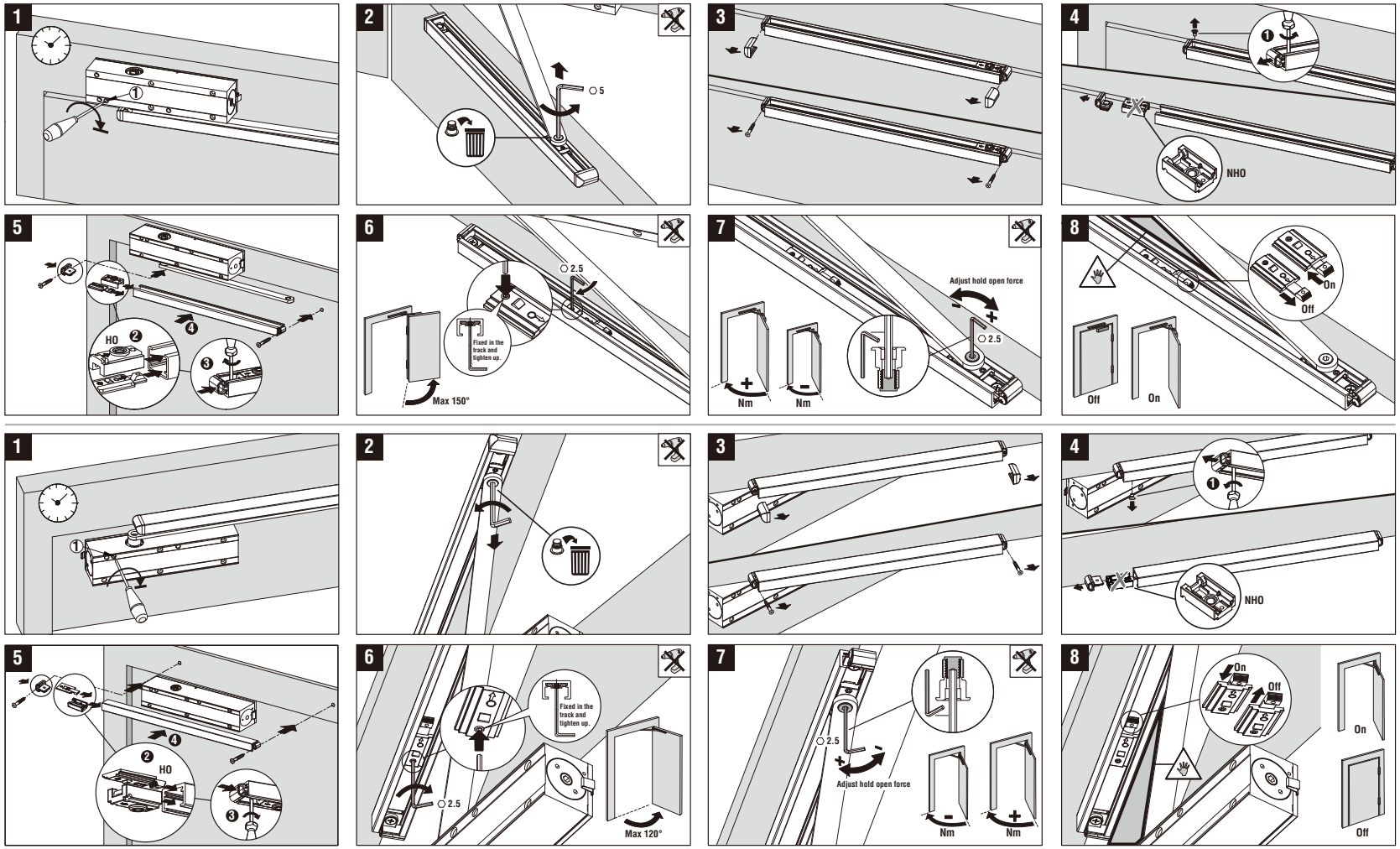
NHO (Non Hold Open)