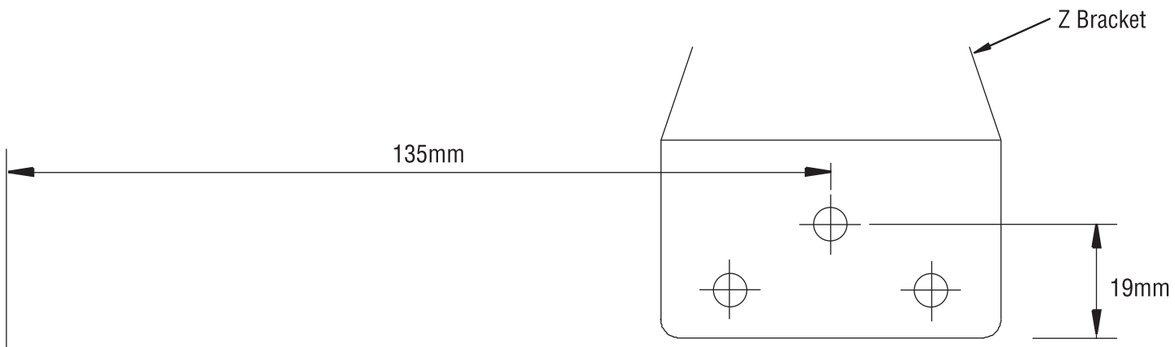

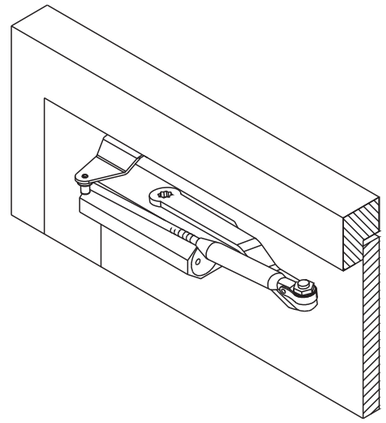

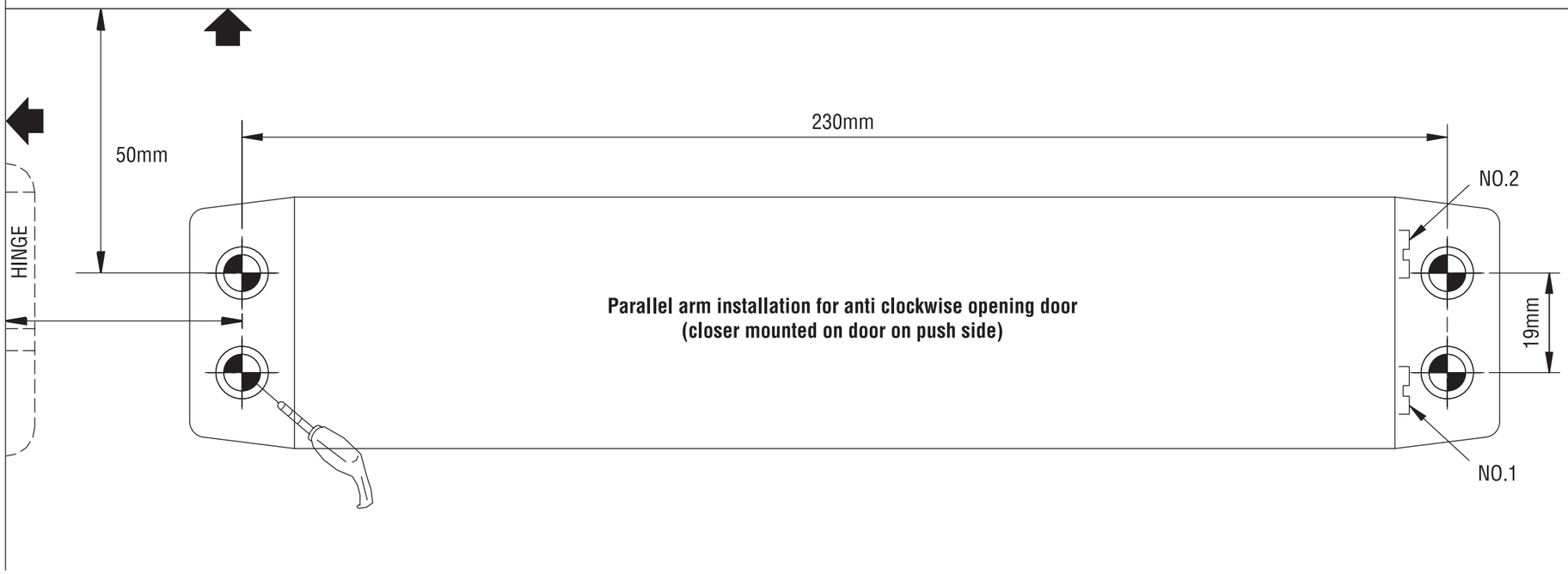

Parallel arm installation for anti clockwise opening door
(closer mounted on door on push side)

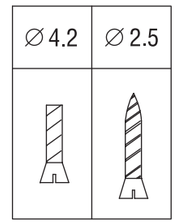

Speed adjusting valve

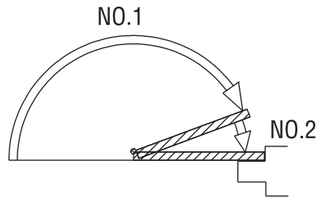

1

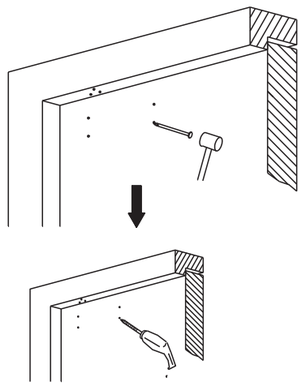

2

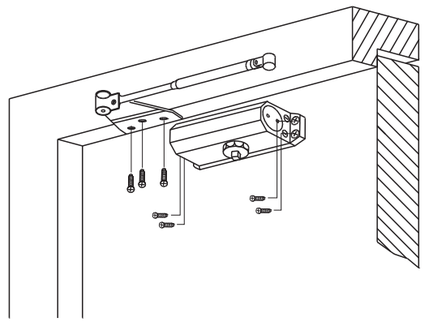

Z type parallel arm bracket should be assembled into position and fixed to closer body.

3

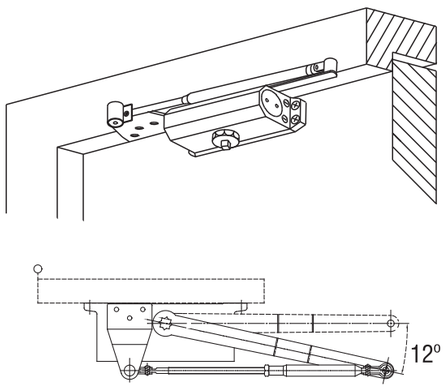

4

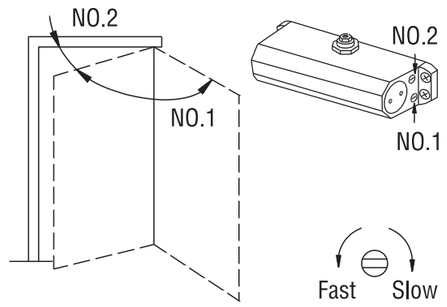

Adjust closing speed

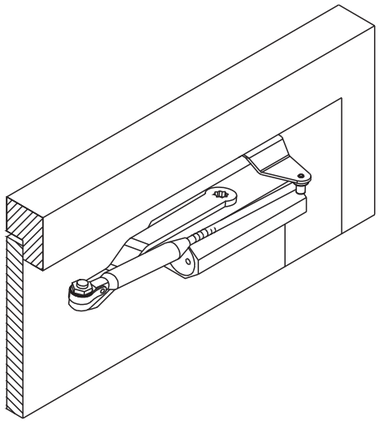

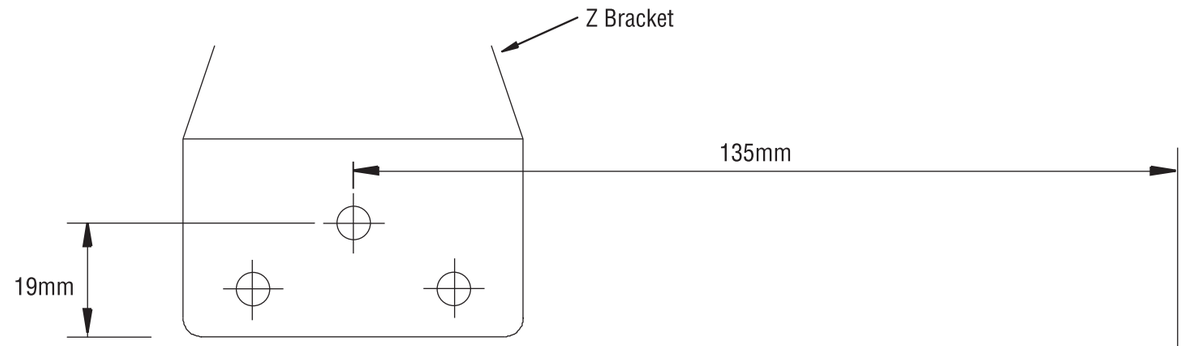

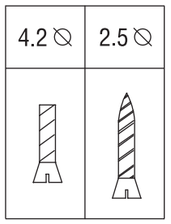

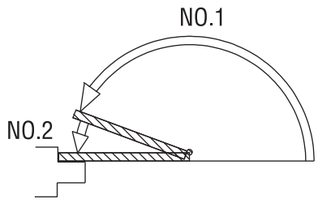

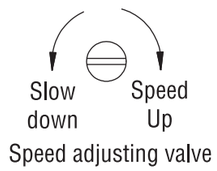

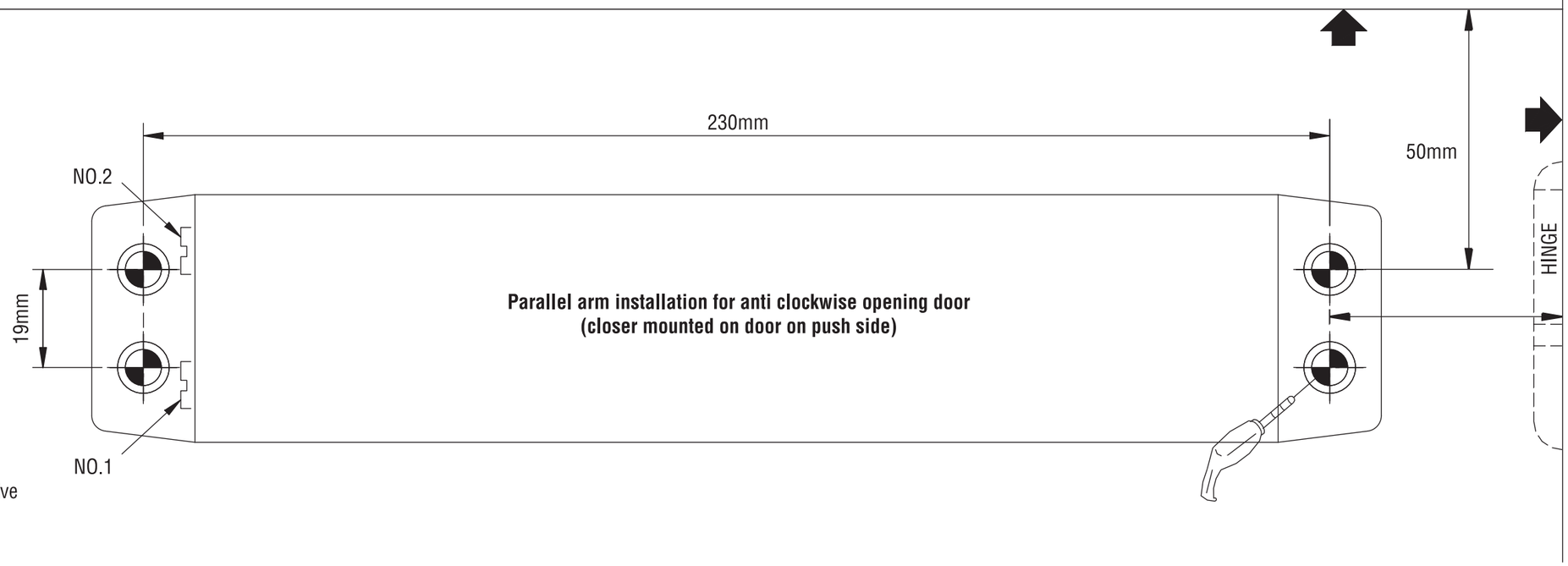

Parallel arm installation for anti clockwise opening door
(closer mounted on door on push side)

1

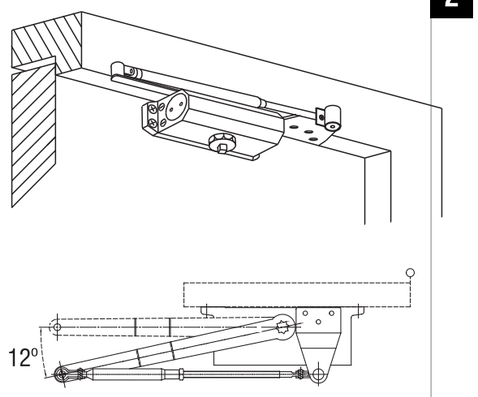

2

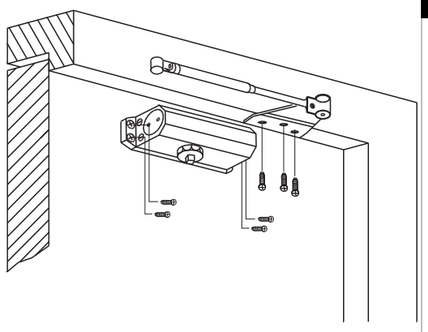

Z type parallel arm bracket should be assembled into position and fixed to closer body.

3

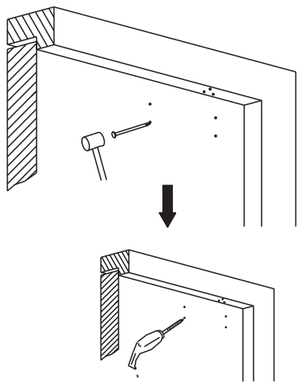

4

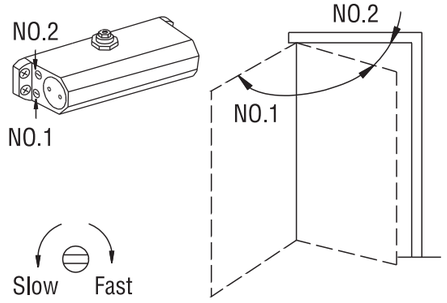

Adjust closing speed