Installation Instructions: Preparation

Please check that all the parts are working correctly. Enter the factory preset code as on the code card, rotate the lever on the keypad once downwards, re-enter the code and rotate the lever upwards, ensuring that the handle rotates freely each time. The lever should return easily under its spring pressure. If you intend to change the code please refer to 'how to change your code number' instructions this can be easily be done before or after the unit has been fitted.

Make sure that the Inside handle device rotates freely and returns under its spring pressure.

Check that the latch bolt of the latch/lock case moves freely by pressing the latch bolt at the end, the latch bolt should spring out under its own spring pressure.

Determining the hand of the door

Many of the installation instructions refer to the handing of the door. The hand of the door is determined with the door in its closed position from the exterior or keypad side of the door.

A) Right hand door – door opens inward (push), hinged on the right side.

B) Left hand door – door opens inward (push), hinged on the left side.

C) Right hand inward opening – door opens outward (pull), hinged on the right side.

D) Left hand inward opening – door opens outward (pull), hinged on the left side,

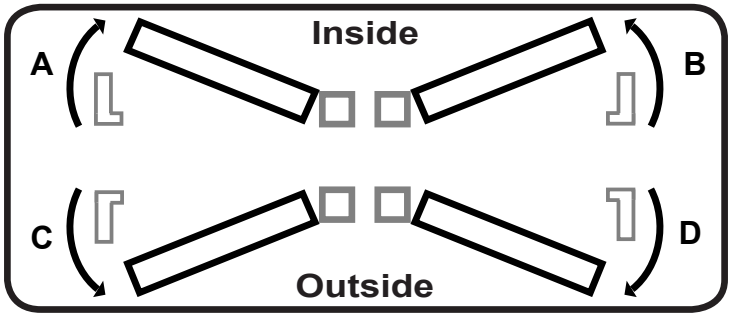

Changing the Handing of the Unit

All units come preset right hand, unless you have specifically ordered left hand.

A4000SIL ECP keypads

To change the handing on the BL5000 ECP and BL5400 (non key override) keypads, this is done by removing the grey grommet located on the side of the keypad handle; this will expose the head of the grub screw underneath.

Using the hex wrench remove the grub screw and this will allow the handle to come away from the handle holder. Place the handle onto the handle holder facing in the correct direction for your hand of door. The grub screw can be tightened back in and the grommet can be replaced.

Inside handles (all models)

To change the handing on the inside handle; this is done by removing the grey grommet located on the side of the inside handle; this will expose the head of the grub screw underneath.

Using the hex wrench remove the grub screw and this will allow the handle to come away from the handle holder. Place the handle onto the handle holder facing in the correct direction for your hand of door. The grub screw can be tightened back in and the grommet can be replaced.

ENTRO

Deactivating the Free Passage Function

To deactivate the free passage function, the free passage deactivation plug from the accessory pack will need to be fitted prior to the unit being fitted to the door.

On the back of the keypad you will see the slot located behind the ‘F’ button.

Using the free passage deactivation plug, insert into the slot marked ‘F’ on the back of the keypad. Ensuring that the dome part facing upwards as per the image below.

Please note that if the free passage deactivation plug is fitted and the unit is fitted to the door, the free passage function will not able to be used. If at a later date the free passage function is required, the unit will need to be removed from the door and the free passage deactivation plug removed.

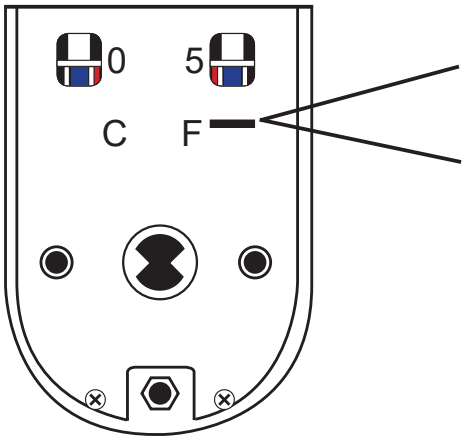

Deactivating on the Door Code Change

In the event where it is known the code will never need to be changed on the door, the deactivating on door code change plug from the accessory pack can be fitted prior to the unit being fitted to the door.

On the back of the keypad you will see a hole with a indicating arrow in the top centre.

Using the on door code change deactivation plug, insert into the hole with the indicating arrow. Ensuring that the dome part facing upwards as per image below.

Please note that if the on door code change deactivation plug is fitted and the unit is fitted to the door, the code will not be able to be changed on the door. If at a later date the on the door code change function is required, the unit will need to be Removed from the door and the on door code change deactivation plug removed.

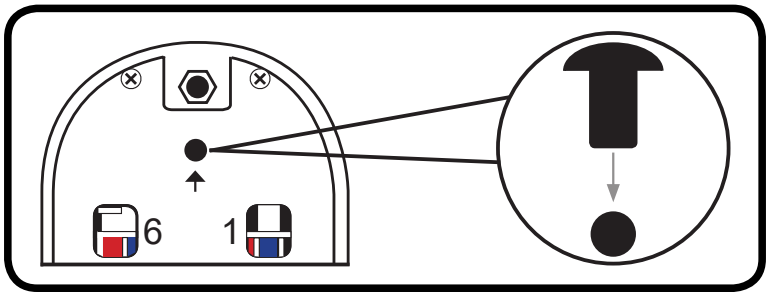

Fitting & Positioning the Spindle

Tubular Latch/lock case - non key override models

Select one of the two spindles supplied 80mm/90mm - use the longest spindle possible. Trimming the spindle down may be required, but this would depend entirely on the thickness of the door. It is recommended that 15mm of the bladed part of the spindle goes into the back of the keypad and inside handle e.g. If the door is 44mm thick the overall spindle length wants to be 74mm.

When putting the spindle through the latch/lock case, ensure that the bladed part of the spindle is angled to the top opening edge of the door as per image below.

Please note if the spindle is cut too short this may cause the spindle to slip out of position if the door is slammed and result in users being locked out.

Tubular Latch/Lock case - Key Override Models

The unit is supplied with a sprung spindle. The spindle comes preset to suit a right hand hung door; whereby the spring is located around the bladed part of the spindle which will go into the inside handle. The spring is fitted to the spindle to ensure the spindle is located and held into the back of the keypad to allow the key override to function correctly. Once you have determined what side of the spindle will go into the inside handle - if the spindle needs to be trimmed it is recommended that the blade which will be going into the back of the inside handle is trimmed.

When putting the spindle through the latch/lock case, ensure that the bladed part of the spindle is angled to the top opening edge of the door as per image below.

Please note if the spindle is cut too short on the side which goes into the keypad the key override will not work; however the inside handle and keypad will operate correctly after entering the correct code.

Narrow Stile/Aluminium Latch

Select one of the three spindles supplied 80mm/90mm or 130mm - use the longest spindle possible. Trimming the spindle down may be required, but this would depend entirely on the thickness of the door. It is recommended that 15mm of the bladed part of the spindle goes into the back of the keypad and inside handle e.g. If the door is 54mm thick the overall spindle length wants to be 84mm.

When putting the spindle through the latch/lock case, ensure that the bladed part of the spindle is angled to the top opening edge of the door as per image below.

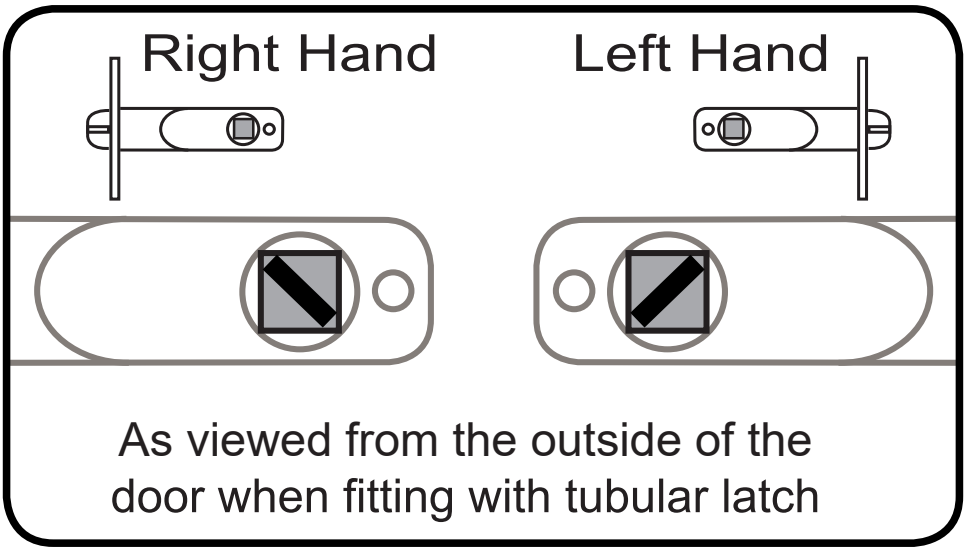

Installation Instructions: Code Change

ENTRO

How to change code number

<u>The code should be changed with the door in the open position</u>. To change the code you will need to know what the keypad is currently set to and have the code change tool.

The code can be changed with the unit fitted on/off the door. The unit is non sequential, therefore if the code is set to 1234, the keypad will open if entered 4321, 3214 etc..There are over 1000 different code combinations available.

1. Enter existing code

2. Using the code change key insert over the button in the top centre of the keypad.
Rotate the code change key 90° right (clockwise) then press and hold the key (until step 5).

3. Press `C` clear button to clear the existing code.

4. Press the digits that are to be in the new code. Once the new code has been entered, press all the digits in the code once again to ensure that all the digits in the code are set.

Please note, If a mistake is made whilst entering a new code (with the button rotated and pressed) the `C` clear button can be pressed, which will cancel any buttons that have been pressed and you can start again.

5. With the new code entered, the code change key can be removed by releasing the pressure and rotating 90° left (clockwise) and remove the key from the button.

6. Press `C` button/turn the keypad handle to set the new code.

7. The new code is now set and ready for use.

8. Check that the code is working 5 times and that it is withdrawing the latchbolt into the door before closing the door.

If a new code has been set and it does not work, the 'C' button has not been pressed when clearing the old code and before inputting the new code; therefore the code will be a combination of the new and old code i.e. if the old code was 1234 and the new code is 6789 the code actually set if 1234 6789. Input both the old and new code and follow the code change from step 1.

If the code has been changed and the keypad lever is free turning, the new code has not been set. Follow the code change from step 2.

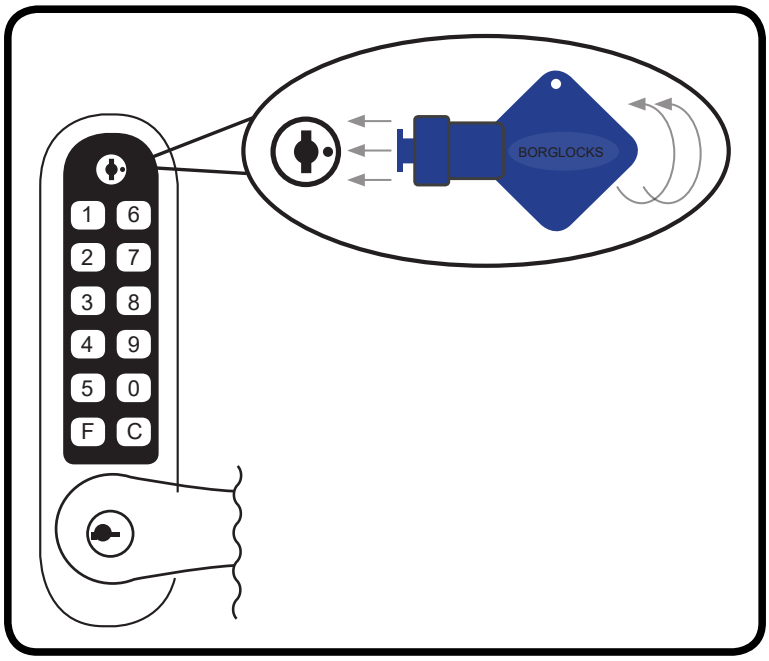

ENTRO

Installation Instructions: Operating & General Use

Operating the Keypad with the Code

When operating the keypad using the code, the 'C' button is to be pressed before entering the code. Pressing the 'C' button ensures that the coding chamber is clear of any buttons that may have accidentally been pressed.

1. Press the 'C' button to clear any pressed buttons.

2. Enter the code.

3. Pull the handle down or turn the knob handle away from the edge door. The door can be pushed/pulled to open.

4. The handle or knob handle can be released and the unit will reset. The door can be closed and the unit will be locked from the keypad side.

Operating with the Key Override

Please note the A4000SIL model only operates the latchbolt of the lock case. If the deadbolt is thrown using the separate cylinder below the keypad, the deadbolt will need to be unlocked by the cylinder below the keypad.

1. Insert the correct key in the cylinder in the keypad handle.

2. Rotate the key away from the edge of the door. Clockwise (right) for a right-handed door or Anti-clockwise (left) for a left hand hung door.

3. Pull/push the door open.

4. With the door open, the key can be removed from the cylinder. The door can be closed and the unit will be locked from the keypad side.

Operating the Inside Handle

When operating the unit from the inside handle, the unit will always allow the handle to turn and open the door. The only time the inside handle will not open the door, is if you have a BL5003, BL5403 or BL5703 and the door is deadlocked using by the cylinder below the keypad/inside handle. The deadbolt will need to be unlocked by the cylinder below the inside handle in order for the inside handle to unlock the door.

1. Pull the handle down or turn the knob handle away from the edge door. The door can be pushed/pulled to open.

2. The handle or knob handle can be released. The door can be closed and the unit will be locked.

Operating the Free Passage Function

Free passage is a function which allows the handle to free turn without the need the enter the code every time a user passes through the door.

Setting the keypad into free passage mode
To operate the free passage function on the keypad, the correct code will need to be entered into the keypad; the handle rotated and the 'F' button pressed - the handle will now be free turning.

Returning the keypad to the locked mode
To take the keypad out of the free passage mode, the keypad handle will need to be rotated and the 'C' button pressed; an audible click will be heard the keypad handle can be released and the keypad will reset and the handle will now be solid and revert back to the locked mode.

Deactivating the Free Passage Function

To deactivate the free passage function, follow the instructions on Page 2.

Installation Instructions: Identifying Lost Code

ENTRO

Identifying a lost code

In the event of a code that has been lost or forgotten the unit will need to be removed from the door.

1. With the unit removed from the door turn the keypad over and you will see that there is 10 portholes which correlate with the buttons on the button side of the keypad, through these holes you will see blue and red lines.

2. Press the ‘C’ button to reset any buttons which may have been pressed.

3. To identify the code the keypad has been set to, you are looking for the red lines which are closest to the centre of the portholes.

4. As per the example diagram below, you will see that the red lines on digits 2, 4, 6 and 8 are closest to the centre of the porthole and is therefore the code. All the other holes will show a blue line - these are not in the code. Once all the coded buttons have been pressed all of the 10 holes will have a blue lines in the centre of the portholes.

5. There is no sequence to the code so as long as all the buttons in the code are pressed the handle will rotate.
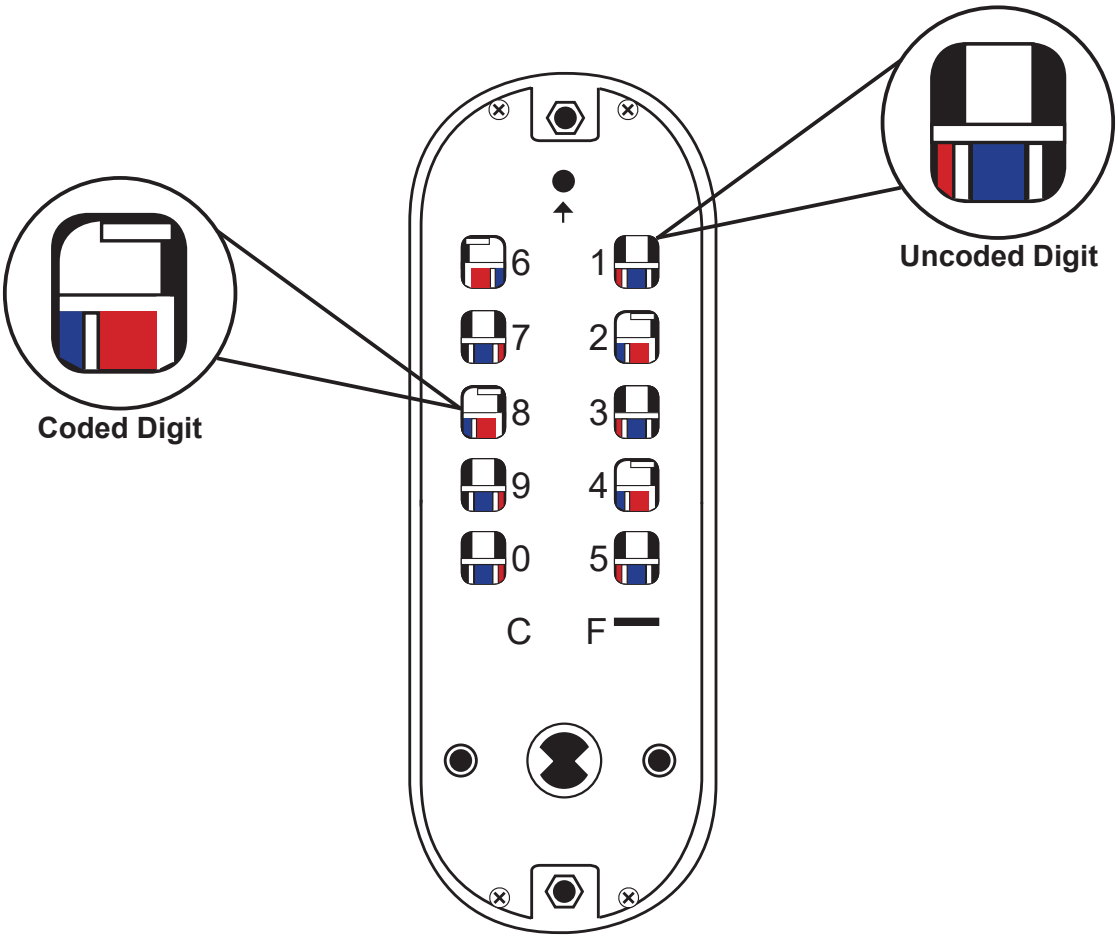
6. Once you have identified the correct code of the unit, make a note of the code before refitting the unit to the door. When refitted to the door the code can be changed.