DORE ELECTRICS
INDUSTRIAL ELECTRICAL COMPONENTS
EST. 1988

LKFC | LKFAC

Fulcrum only

Material:
Zinc-plated steel cam, combined with rod latch system

LKFC: Clockwise Locking
LKFAC: Anticlockwise Locking

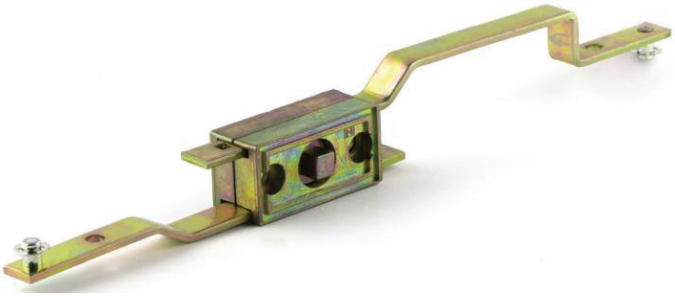

Dimensions
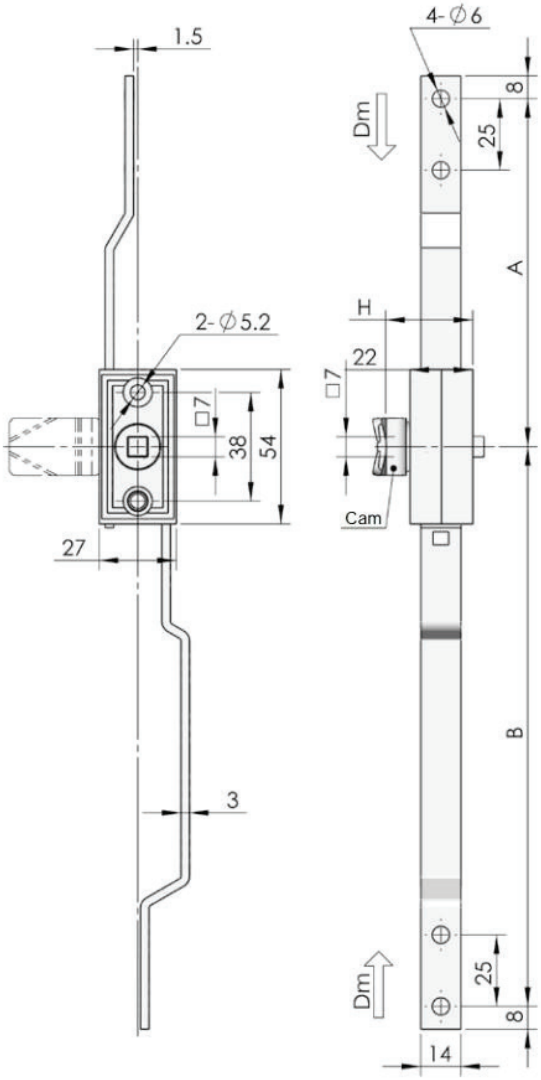
Dm (Rod stroke)	Rotation	A	B	H	Cam Length
15	90°	122	196	23.5	35mm