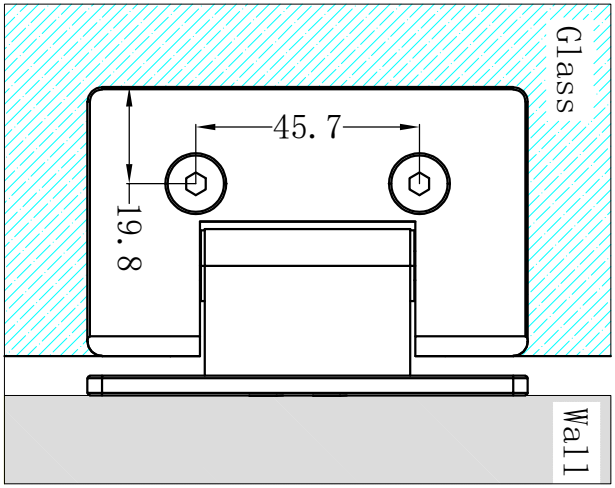
Glass
45.7
19.8
Wall

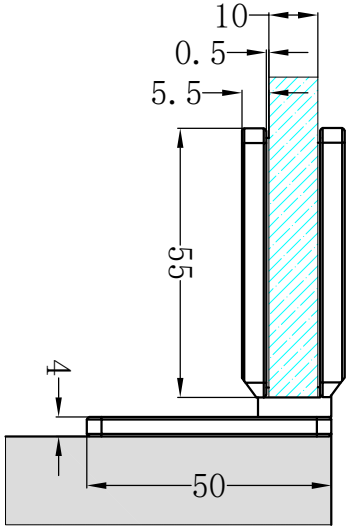
10
0.5
5.5
55
4
50

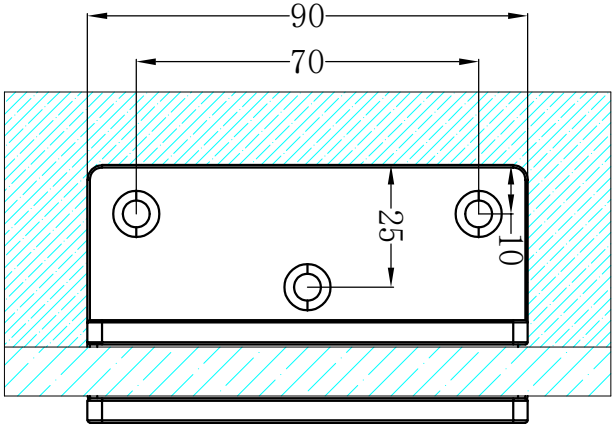
90
70
25
10