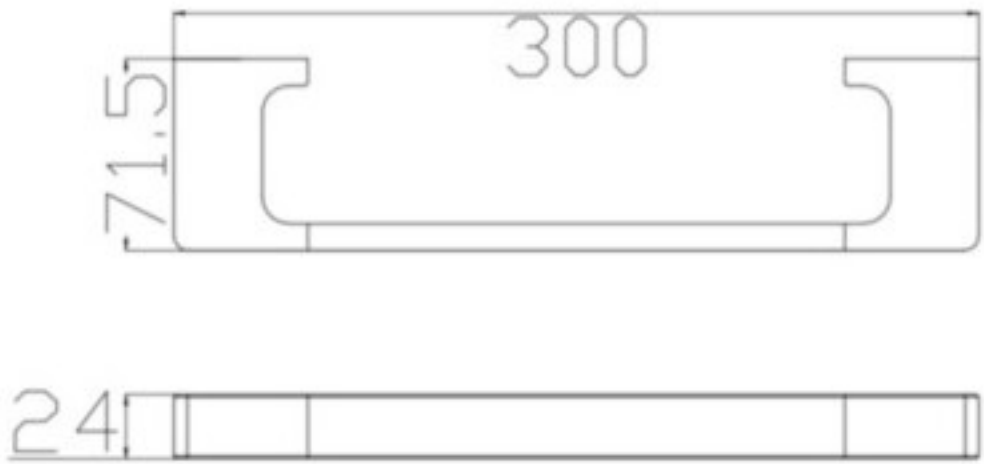
300
71.5
24