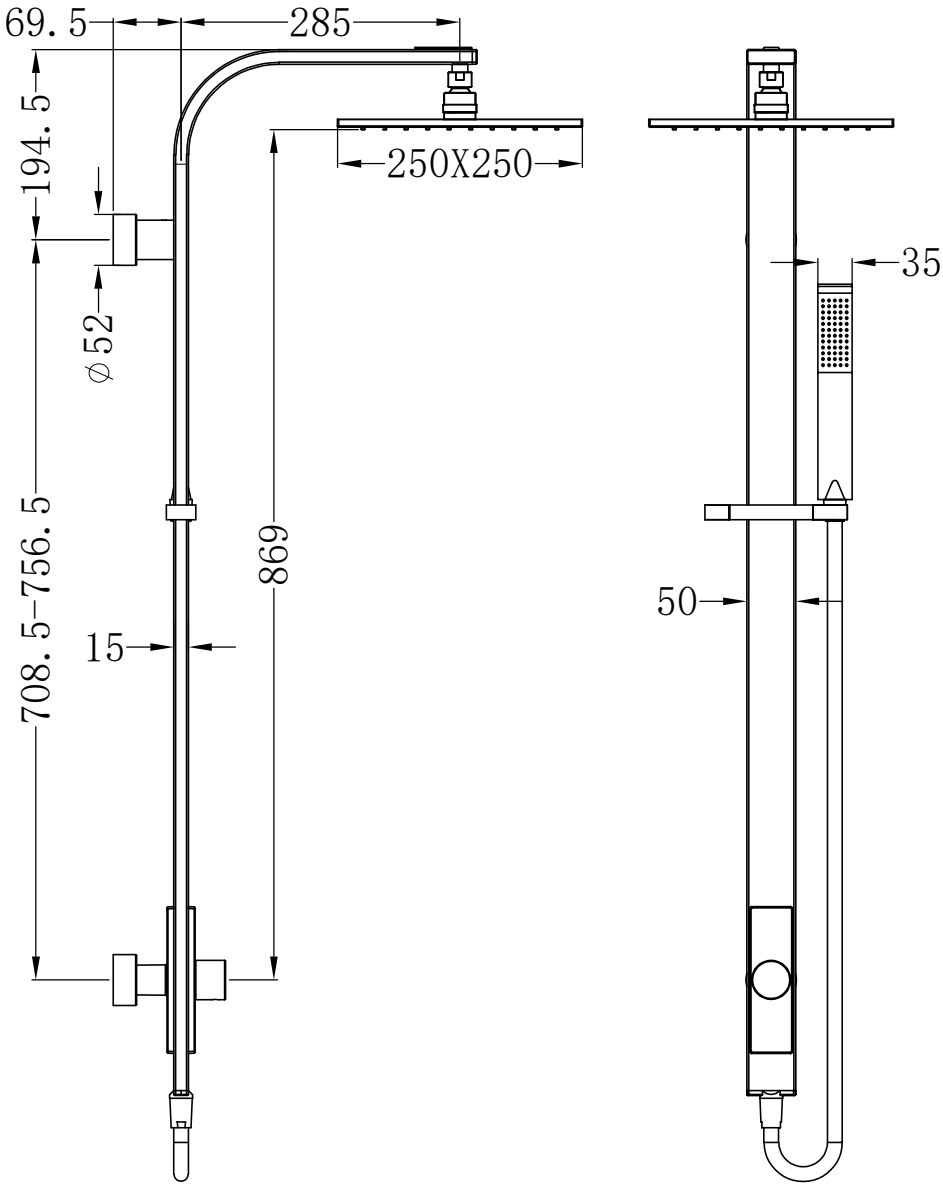
69.5
285
194.5
250X250
35
∅52
869
708.5-756.5
15
50