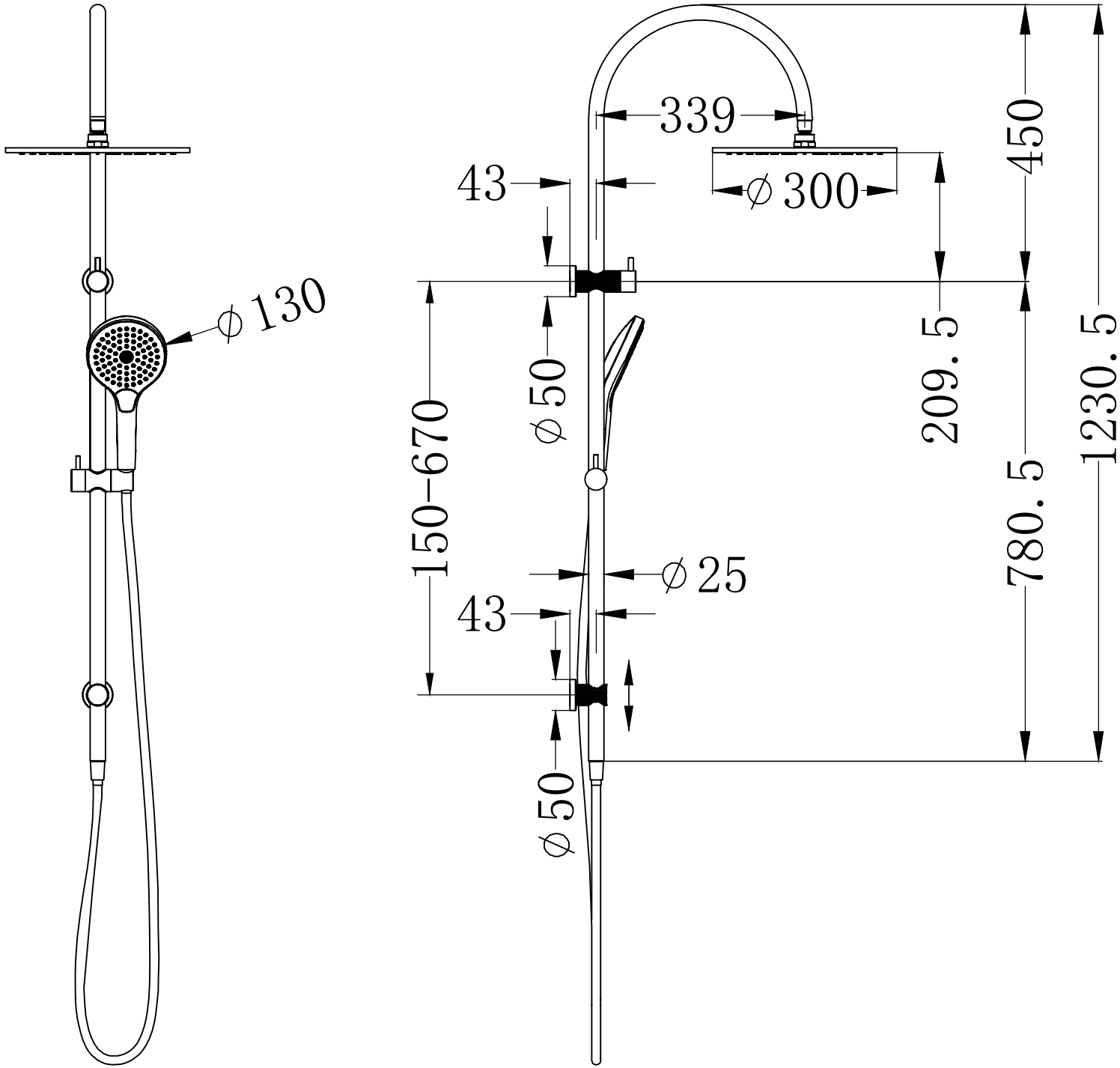
339
43
∅300
450
∅130
∅50
209.5
1230.5
150-670
780.5
∅25
43
∅50