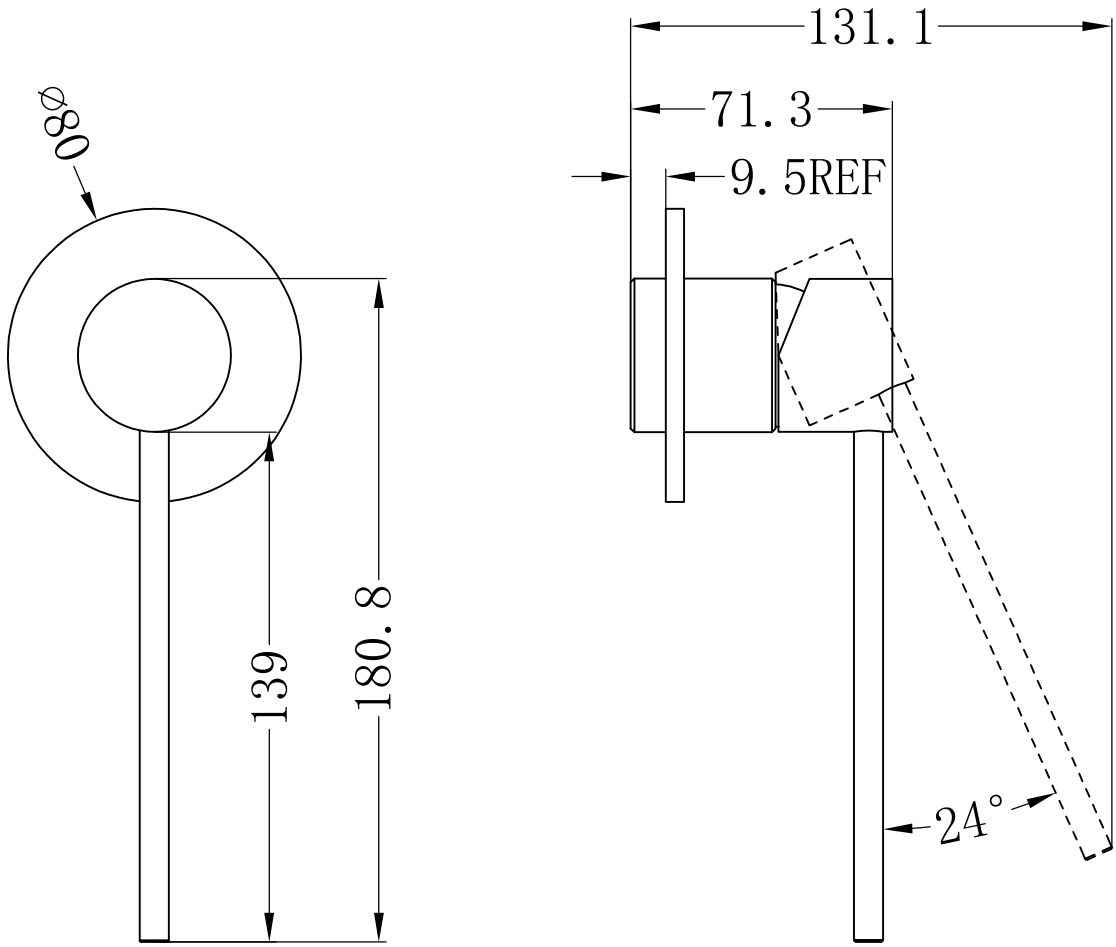
131.1
71.3
9.5REF
Ø80
139
180.8
24°