WATER SERVICE BALL VALVES

Poly Connection DN X FI Lilac

Product Specifications

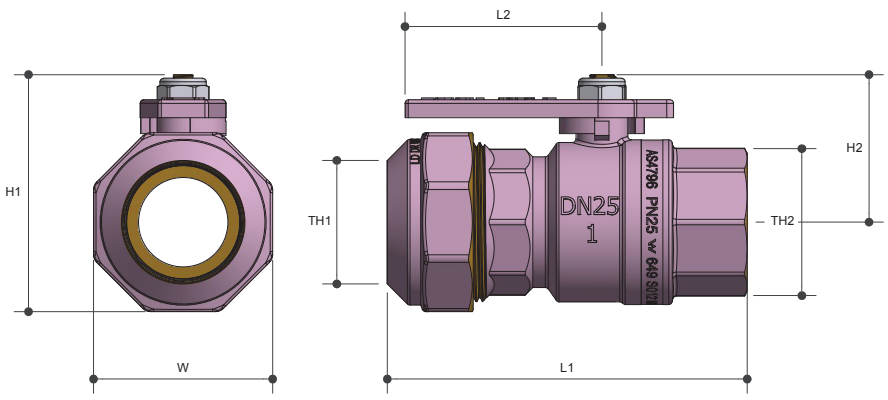

Specifications

Working Temperature 1°C to 60°C
Maximum Pressure Rating 1600 kPa

Sizing Chart (MM)

	L1	L2	H1	H2	W	TH1	TH2
WPE2025FRW	88	55	58	37	43	DN25	Rp 3/4"
WPE2532FRW	101	55	66	41	50	DN32	Rp 1"

Material Chart

Part	Material
Seal	PTFE
Nut	Stainless Steel
Body	DR Brass
Handle	DR Brass
Ball	Stainless Steel
Cap	DR Brass
O Ring	FKM
Spindle	DR Brass

Features

Watermark approved
DR Brass
Full Bore
100% pressure tested
No disassembly required, pipe can be inserted without disassembling the fitting
Triple lip seal
No fidly thimbles or grab rings
Spare parts available
Tested and certified to AS 4796

For more information on Logi Civil, contact:
Austworld 15 Activity Crescent, Molendinar, Queensland 4214 Australia
P. 1300 780 430 F. 1300 780 441 E. info@austworld.com.au

Austworld Pty Ltd. All rights reserved 2018.
Austworld and Logi Civil are registered trade mark belonging to Austworld Pty Ltd.